PROMXOLDING
+7 (499) 707–71–08
+7 (812) 385–42–35
+7 (831) 281–18–21

HIWIN®
Motion Control and System Technology

Positioning Measurement System

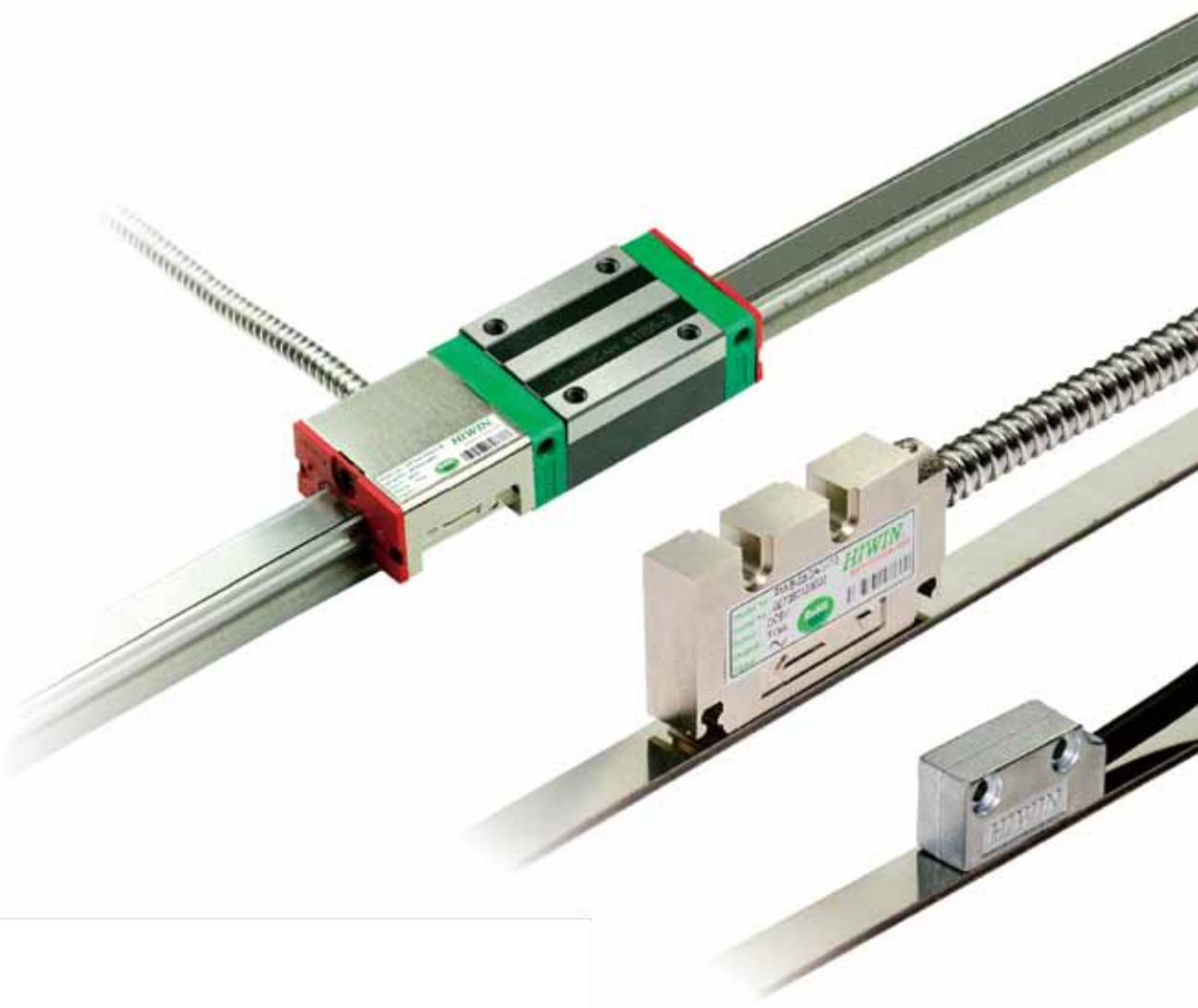

Technical Information

PROMXOLDING
+7 (499) 707–71–08
+7 (812) 385–42–35
+7 (831) 281–18–21

HIWIN®
Motion Control and System Technology

INDUSTRIE 4.0 Best Partner

Multi Axis Robot
Pick-and-place / Assembly / Grinding and Polishing / Semiconductor / Light Industry / Automotive industry / Food industry
- Articulated Robot
- Delta Robot
- Movable Delta Robot
- SCARA Robot
- Wafer Robot
- Electric Gripper

Single Axis Robot
Precision / Semiconductor / Medical / FPD
- KK , SK
- KS, KA
- KU, KE

Medical Equipment
Hospital / Rehabilitation centers / Nursing homes
- Robotic Gait Training System
- Hygiene System
- The Robotic Endoscope Holder
- Robot for Upper Limb Exercise

Ballscrew
Precision Ground / Rolled
- Super S series
- Super T series
- Mini Roller
- Ecological & Economical lubrication Module E2
- Rotating Nut (R1)
- Energy-Saving & Thermal-Controlling (C1)
- Heavy Load Series (RD)

Linear Guideway
Automation / Semiconductor / Medical
- Ball Type--HG, EG, WE, MG, PM
- Quiet Roller Type--QH, QE, QW, QR
- Other--RG, E2, PG, SE, RC

Direct Drive CNC Tilting Rotary
Aerospace / Medical / Auto industry
- RAB-800
- RAB-500

Bearing
Machine tools / Robot
- Crossed Roller Bearings
- Ball Screw Bearings
- Linear Bearing
- Support Unit

AC Servo Motor & Drive
Semiconductor / Packaging machine / SMT / Food industry / LCD
- Drives-D1, D1-N, D2
- Motors-400W~2000W

Torque Motor (Direct Drive Motor)
Inspection / Testing equipment / Machine tools/ Robot
- Rotary Tables-TMS,TMY,TMN
- TMRW Series

Linear Motor
Automated transport / AOI application / Precision / Semiconductor
- With Iron-core
- Coreless Type
- Linear Turbo LMT
- Planar Servo Motor
- Air Bearing Platform
- X-Y Stage
- Gantry Systems

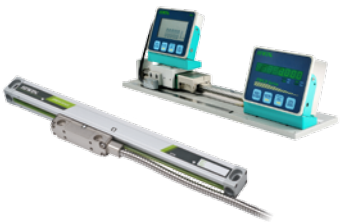

Positioning Measurement System
Cutting machines / Traditional gantry milling machines / Programmable drilling machines
- High Resolution
- Signal Translator
- High-precision Enclosed
- High Efficiency Counter

PROMXOLDING
+7 (499) 707–71–08
+7 (812) 385–42–35
+7 (831) 281–18–21

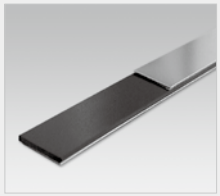
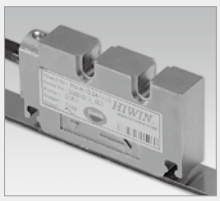
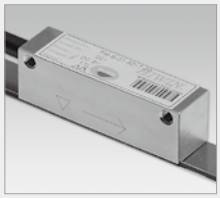
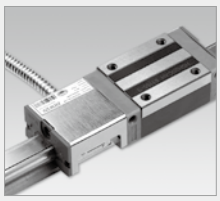

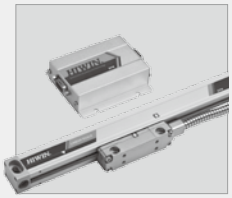

I. High Resolution Positioning Measurement System

1. Positioning Scale 1
2. Positioning Measurement - Tiny Type 2
3. Positioning Measurement - Standard Type 5
4. Positioning Measurement - Vertical Type 8
5. Positioning Measurement - PG Type 12
6. Positioning Measurement - E Type 16
7. Positioning Measurement - H Type 18

II. Signal Translator 20

III. High-precision Enclosed Positioning Measurement System 23

IV. High Efficiency Counter

1. Micro LCD counter 27
2. LCD counter system 29
3. High Efficiency Single Axis Counter 31
4. Multi-axis Counter 34
5. High Efficiency Multi-axis Counter 36

V. Accessories

1. Signal Transfer Cable 38
2. Positioning Scale Installation Fixture 38
3. Positioning Scale Fixture 38

VI. Customer's Requirements(PM) 39

+7 (499) 707–71–08
+7 (812) 385–42–35
+7 (831) 281–18–21

The Component Breakdown of the Positioning Measurement System - 1mm Placement Figure (Analog)

Pole Pitch	Refer Page	Resolution	Encoder Type	Refer Page	Signal	Type of Connector
1mm PS-B-□□□□□ 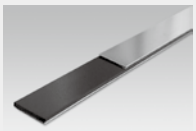	Page 1	1μm	**T Type** **PM-B-□□-□A-T-□□** 	Page 2	**Analog**	**Flying Lead** D-sub VGA 15 Pin
			Standard Type PM-B-□□-□A-S-□□ 	Page5		D-sub 15 Pin 17 Pin Circular Plug
			Vertical Type PM-B-□□-□A-V-□□ 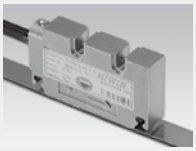	Page 11		SCSI 14 Pin SCSI 14 Pin(**with screw**)
			PG Type PM-B-□□-□A-G-□□-□□ 	Page 8		SCSI 20 Pin

+7 (499) 707–71–08
+7 (812) 385–42–35
+7 (831) 281–18–21

Translator	Refer Page	Trunk Connector	Refer Page	Counter/Display Application	Refer Page
				High Efficiency Single Axis Counter PMED-H1-1-00-□	Page 29
		Hiwin Drive		Linear Motors (HIWIN LM)	

+7 (499) 707–71–08
+7 (812) 385–42–35
+7 (831) 281–18–21

The Component Breakdown of the Positioning Measurement System - 1mm Placement Figure (Digital)

Pole Pitch	Refer Page	Resolution	Encoder Type	Refer Page	Signal	Type of Connector
1mm PS-B-□□□□□ 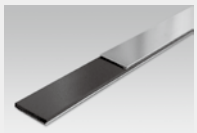	Page 1	1μm	**T Type** **PM-B-□□-□D-T-□□** 	Page 2	Digital	**Flying Lead** D-sub VGA 15 Pin
			Standard Type PM-B-□□-□D-S-□□ 	Page 5		D-sub 15 Pin 17 Pin Circular Plug
			Vertical Type PM-B-□□-□D-V-□□ 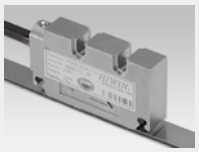	Page 11		SCSI 14 Pin SCSI 14 Pin(**with screw**)
			PG Type PM-B-□□-□D-G-□□-□□ 	Page 8		SCSI 20 Pin

PROMXOLDING
+7 (499) 707–71–08
+7 (812) 385–42–35
+7 (831) 281–18–21

	Counter/Display Application	Refer Page
	PLC、Drive、Controller 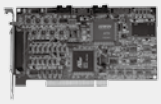	
	High Efficiency Single Axis Counter PMED-H1-1-00-□	Page 29
	High Efficiency Multi-axis Counter PMED-S4-□-□ 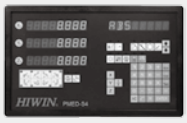	Page 34
	Multi-axis Counter PMED-S3-□-□	Page 32
Hiwin Drive	**Linear Motors (HIWIN LM)**	

+7 (499) 707–71–08
+7 (812) 385–42–35
+7 (831) 281–18–21

The Component Breakdown of the Positioning Measurement System - 5mm Placement Figure (Analog)

Pole Pitch	Refer Page	Resolution	Encoder Type	Refer Page	Signal	Type of Connector
5mm PS-A-□□□□□ 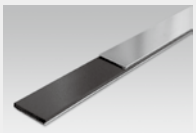	Page 1	5μm	**E Type** PM-A-□□-□A-E-00 	Page 16	**Analog**	D-sub VGA 15 Pin
			H Type PM-A-□□-□A-H-□□ 	Page 18		SCSI 14 Pin SCSI 14 Pin (with screw)

+7 (499) 707–71–08
+7 (812) 385–42–35
+7 (831) 281–18–21

Translator	Refer Page	Trunk Connector	Refer Page	Counter/Display Application	Refer Page
				Micro LCD Counter UPLD-A-□□-□-□□	Page 27
				LCD Counter System PMLD-A-□□-□-□□	Page 29
				High Efficiency Single Axis Counter PMED-H1-1-A1-□	Page 31
			Page 21	High Efficiency Multi-axis Counter PMED-S4-□-□	Page 36
Translator ST-A-□□	Page 20	D-sub 9 Pin to D-sub VGA 15 Pin STC-□□-00-□		Multi-axis Counter PMED-S3-□-□	Page 34
				PLC、Drive、 Controller 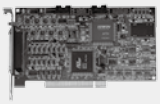	

+7 (499) 707–71–08
+7 (812) 385–42–35
+7 (831) 281–18–21

The Component Breakdown of the Positioning Measurement System - 5mm Placement Figure (Digital)

Pole Pitch	Refer Page	Resolution	Encoder Type	Refer Page	Signal	Type of Connector
5mm PS-A-□□□□□ 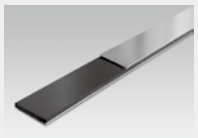	Page 1	5μm	**Vertical Type** PM-A-□□-□D-V-□□ 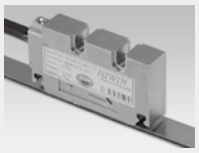	Page 11	**Digital**	**Flying Lead** D-sub VGA 15 Pin D-sub 15 Pin **SCSI 20 Pin**

PROMXOLDING
+7 (499) 707–71–08
+7 (812) 385–42–35
+7 (831) 281–18–21

	Counter/Display Application	Refer Page
	PLC、Drive、Controller 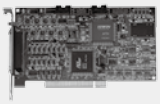	
	High Efficiency Multi-axis Counter PMED-S4-□-□	Page 34
	Multi-axis Counter PMED-S3-□-□	Page 32
	High Efficiency Single Axis Counter PMED-H1-1-00-□	Page 29
Hiwin Drive	Linear Motors (HIWIN LM)	

+7 (499) 707–71–08
+7 (812) 385–42–35
+7 (831) 281–18–21

I. High Resolution Positioning Measurement System

1. Positioning Scale

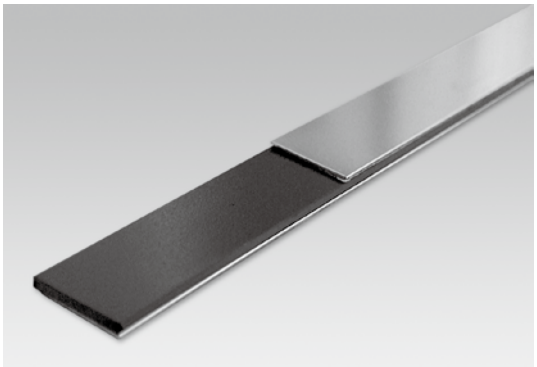

Features:

- Compatible with various measurement instruments to achieve different accuracy requirements.
- Magnetic scale can maintain performance under severe ambient conditions caused by oil, water or dust to gain required accuracy and signal feedback.

1.1 Specifications:

Pole pitch	1mm	5mm
Accuracy@20℃	±20 μ m/m	±(80+15xL) μm (L：Length(Unit: m))
Width	10mm (0mm~+0.2mm)	
Thickness	1.9mm (±0.1mm)	
Maximum scale length	24m	30m
Coefficient of linear thermal expansion	(11±1)×10^{-6}m/K	
Working temperature	0℃~50℃	
Storage temperature	-5℃~70℃	
Protection class	IP67	

1.2 Ordering Code:

PS - X - XXXXX

PS:Positioning Scale

Pole Pitch
A：5mm
B：1mm

Length(Unit:mm)
10 : 10mm
⋮
30000 : 30000mm

1.3 Dimensions:

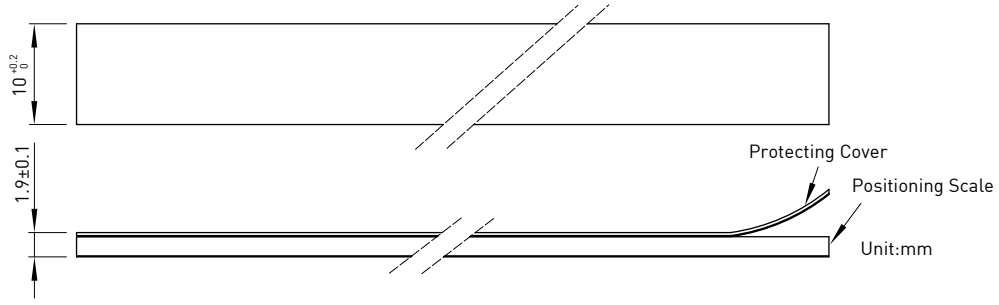

Caution!

1. Magnetic scale consists of magnetic substance and should be kept away from strong magnetic filed during installation to prevent a malfunction.
2. Please leave the magnetic field strength 5000 gauss at least 5cm, to prevent the position measurement system from disruption.

+7 (499) 707–71–08
+7 (812) 385–42–35
+7 (831) 281–18–21

2. Positioning Measurement- Tiny Type

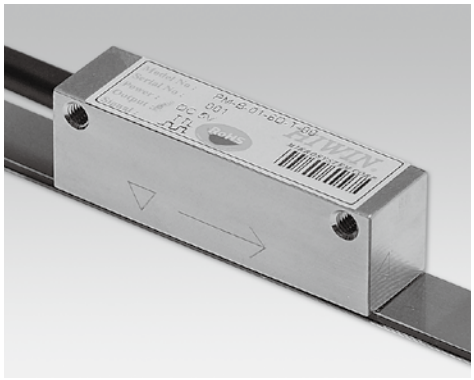

Features:

- Tiny shape
- Digital or analog output available
- Simple design and easy-mounting
- Same installation holes as other optical encoders, easy to switch and replace
- Resolution up to 1 μ m.
- Repeatability up to ±2 μ m.
- Available gap up to 0.4mm.

2.1 Specifications:

Pole Pitch	1mm	
Available gap[1]	0.4mm	
Signal format	Analogue	Digital
Output signal	SIN/COS 1Vp-p	5V TTL/RS422
Resolution	1mm	1μm
Repeatability[2]	±3μm	±2μm
Reference signal	1 mm/pulse	
Maximum travel speed	10m/sec	5m/sec
Input voltage	5VDC±5%	
Operating temperature	0˚C~50˚C	
Storage temperature	-5˚C~70˚C	
Protection class	IP67	

Note: (1) Please refer Chap 2.7 for Gap-Repeatability relationship.
(2) The data were measured while gap is 0.1mm.

2.2 Ordering Code:

PM - B- 01 – X X – T - XX

PM:Positioning Measurement

Pole Pitch
B:1mm

Cable Length: (Unit:m; Max 10m)
01:1M
02:2M
⋮
10:10M

Connector:
0: Flying lead
1:SCSI 20 Pin
2:SCSI 14 Pin
3:D-Sub 15 Pin
4:17 Pin Circular Plug (M17)
5:SCSI 14 Pin (screw type)
6:D-sub VGA 15 Pin

Signal Format:
A:Analogue SIN/COS 1Vp-p
D:Digital 5V RS422/TTL

Housing:
T:Tiny type

10:Standard
11:With metal tube

+7 (499) 707–71–08
+7 (812) 385–42–35
+7 (831) 281–18–21

2.3 Dimensions:

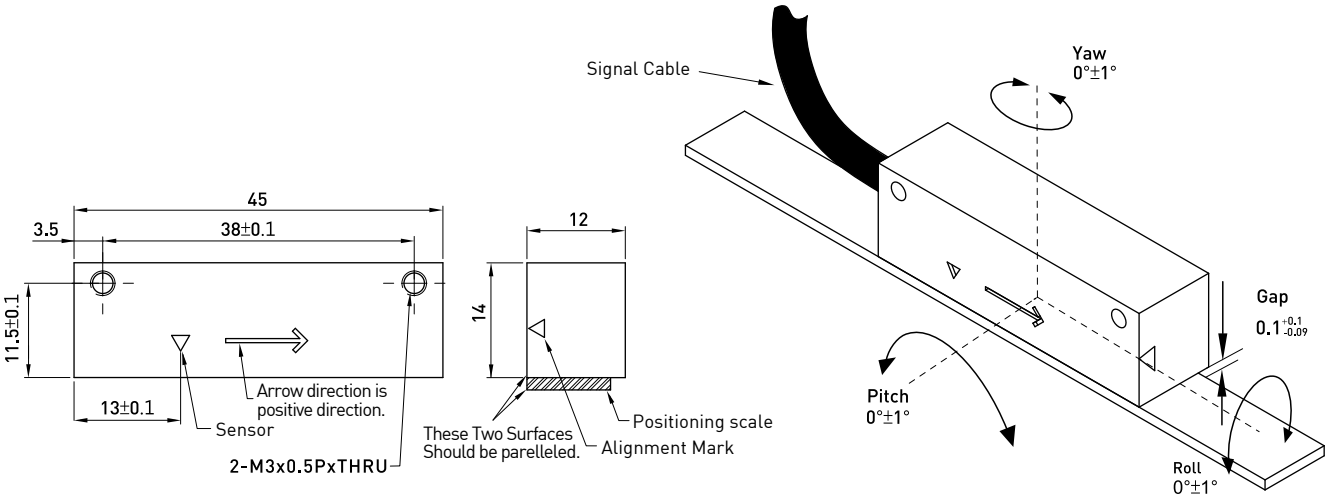

Unit : mm

2.4 Pin Assignment:

Function	Signal		Color	Connector (male) (SCSI 14 Pin) Analogue	Connector (male) (SCSI 20 Pin)		Connector (male) (D-Sub 15 Pin)		Connector (male) [1] (17 Pin Circular Plug)	Connector (male) (D-Sub VGA 15 Pin)		Flying Lead
	Analogue	Digital			Analogue	Digital	Analogue	Digital		Analogue	Digital	
Power	5VDC		Brown	1	3	3	4	7	4/5	1	1	Brown
	GND		White	8	2	2	12	2	12/13	2	2	White
Output Signal	SIN+	A+	Green	10	16	4	9	14	9	11	3	Green
	SIN-	A-	Yellow	11	17	5	1	6	1	12	9	Yellow
	COS+	B+	Blue	3	18	6	10	13	10	13	4	Blue
	COS-	B-	Red	4	19	7	2	5	2	14	10	Red
Reference Signal	REF+	Z+	Purple	5	8	8	3	12	3	7	7	Purple
	REF-	Z-	Gray	6	9	9	11	4	11	8	8	Gray
Shield				Case	1/Case		Case		Case	Case		

Note: (1)17 Pin Circular Plug; Brnad: INTERCONTEC; P/N:AKU874MR1087004A000

2.5 Signal Format:

SIN/COS 1Vp-p

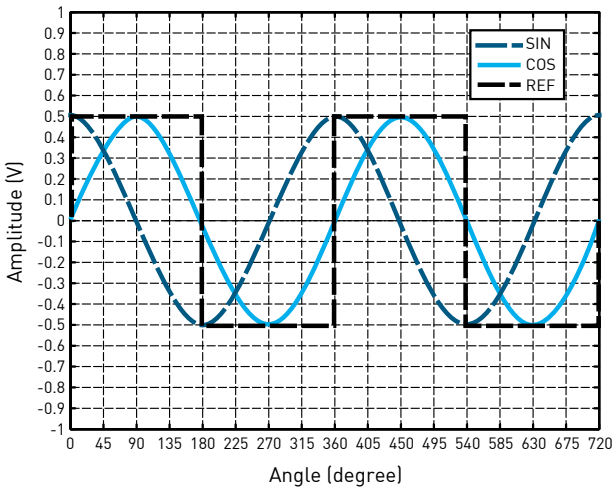

5V TTL/RS422

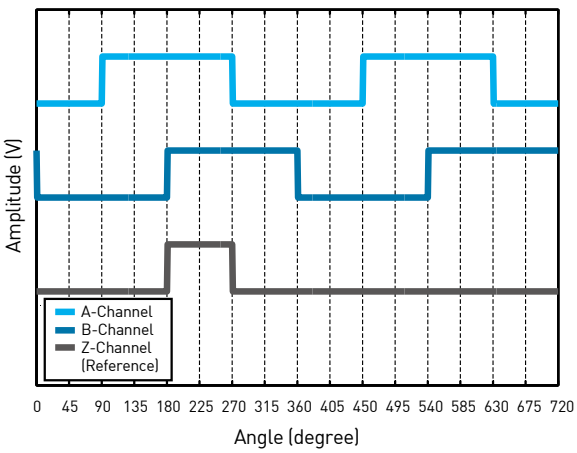

+7 (499) 707–71–08
+7 (812) 385–42–35
+7 (831) 281–18–21

2.6 Recommended Input Circuit:

SIN/COS 1Vp-p	5V TTL/RS422
A-channel	
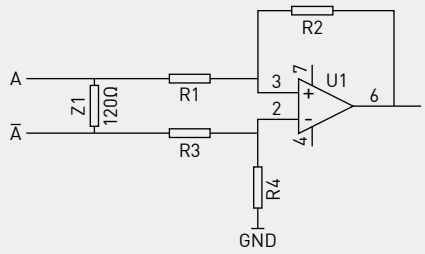	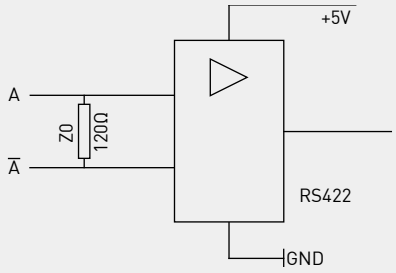
B-channel	
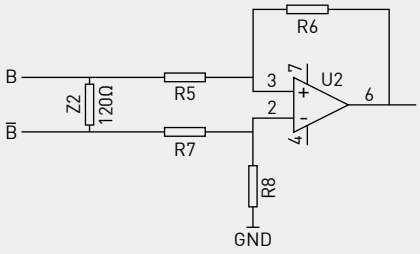	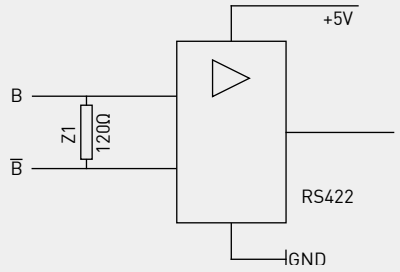
Reference-channel	
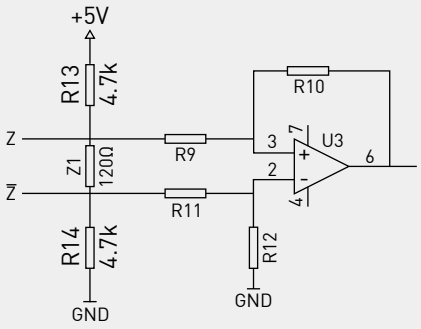	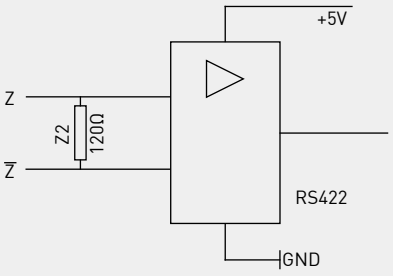

2.7 Gap-Repeatability Relationship:

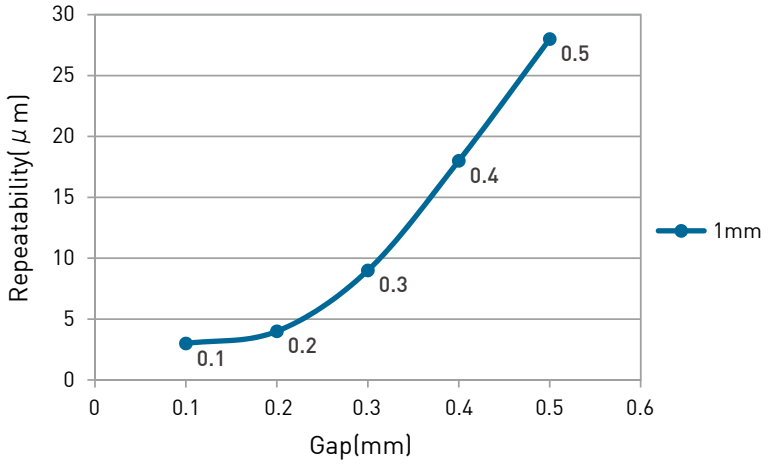

+7 (499) 707–71–08
+7 (812) 385–42–35
+7 (831) 281–18–21

3. Positioning Measurement- Standard Type

Features:

- Digital or analog signal output available
- Simple design and easy-mounting
- Same installation holes as other optical encoders, easy to switch and replace
- Waterproof and dustproof
- Optional metal protection tube
- Resolution up to 1 μ m.
- Repeatability up to ±2 μ m.
- Available gap up to 0.4mm.

3.1 Specifications:

Pole Pitch	1mm	
Available gap[1]	0.4mm	
Signal format	Analogue	Digital
Output signal	SIN/COS 1Vp-p	5V TTL/RS422
Resolution	1mm	1μm
Repeatability[2]	±3μm	±2μm
Reference signal	1 mm/pulse	
Maximum travel speed	10m/sec	5m/sec
Input voltage	5VDC±5%	
Operating temperature	0˚C~50˚C	
Storage temperature	-5˚C~70˚C	
Protection class	IP67	

Note: (1) Please refer Chap 3.7 for Gap-Repeatability relationship.
(2) The data were measured while gap is 0.1mm.

3.2 Ordering Code:

PM - B- 01 – X X – S - XX

PM：Positioning Measurement

Pole Pitch
B：1mm

Cable Length: (Unit:m; Max 10m)
01：1M
02：2M
⋮
10：10M

10:Standard
11:With metal tube

Housing:
S:Standard type

Signal Format:
A:Analogue SIN/COS 1Vp-p
D:Digital 5V RS422/TTL

Connector:
0: Flying lead
1:SCSI 20 Pin
2:SCSI 14 Pin
3:D-Sub 15 Pin
4:17 Pin Circular Plug (M17)
5:SCSI 14 Pin (screw type)
6:D-sub VGA 15 Pin

+7 (499) 707–71–08
+7 (812) 385–42–35
+7 (831) 281–18–21

3.3 Dimensions:

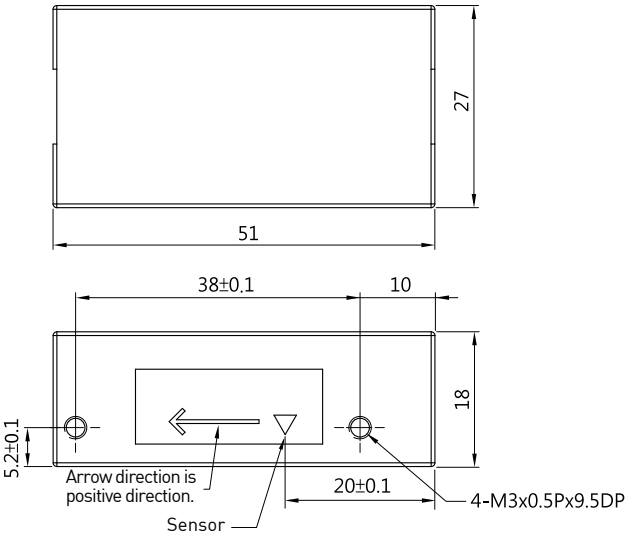

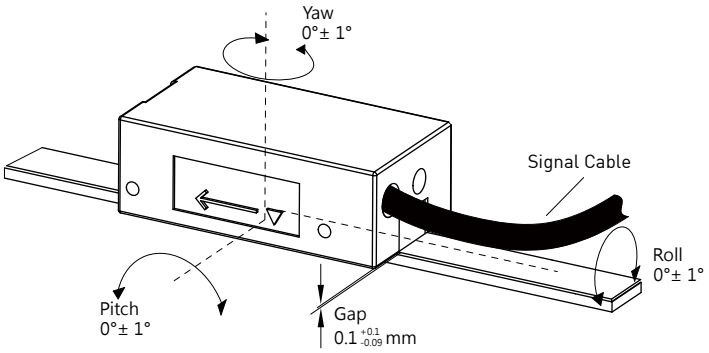

Unit : mm

3.4 Pin Assignment:

Function	Signal		Color	Connector (male) (SCSI 14 Pin) Analogue	Connector (male) (SCSI 20 Pin)		Connector (male) (D-Sub 15 Pin)		Connector (male) [1] (17 Pin Circular Plug)	Connector (male) (D-Sub VGA 15 Pin)		Flying Lead
	Analogue	Digital			Analogue	Digital	Analogue	Digital		Analogue	Digital	
Power	5VDC		Brown	1	3	3	4	7	4/5	1	1	Brown
	GND		White	8	2	2	12	2	12/13	2	2	White
Output Signal	SIN+	A+	Green	10	16	4	9	14	9	11	3	Green
	SIN-	A-	Yellow	11	17	5	1	6	1	12	9	Yellow
	COS+	B+	Blue	3	18	6	10	13	10	13	4	Blue
	COS-	B-	Red	4	19	7	2	5	2	14	10	Red
Reference Signal	REF+	Z+	Purple	5	8	8	3	12	3	7	7	Purple
	REF-	Z-	Gray	6	9	9	11	4	11	8	8	Gray
Shield				Case	1/Case		Case		Case	Case		

Note: (1)17 Pin Circular Plug; Brnad: INTERCONTEC; P/N:AKU874MR1087004A000

3.5 Signal Format:

SIN/COS 1Vp-p

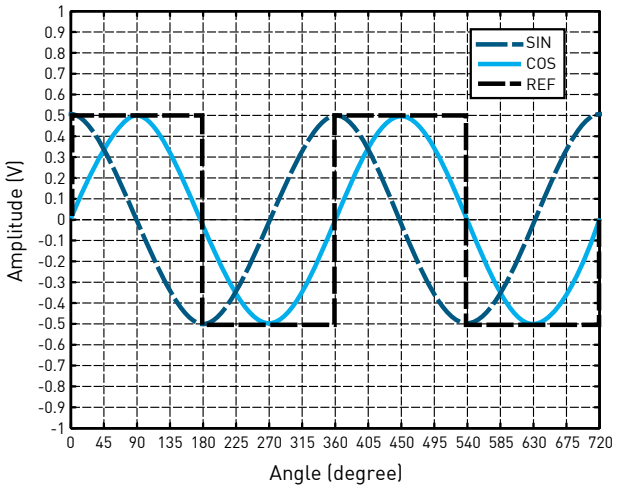

5V TTL/RS422

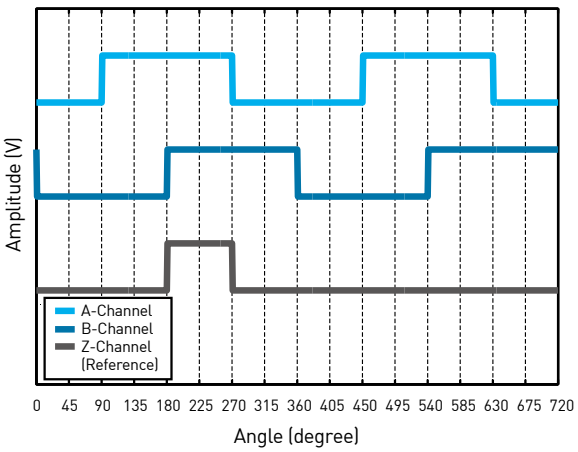

+7 (499) 707–71–08
+7 (812) 385–42–35
+7 (831) 281–18–21

3.6 Recommended Input Circuit:

SIN/COS 1Vp-p	5V TTL/RS422
A-channel	
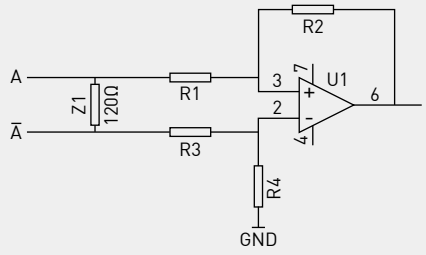	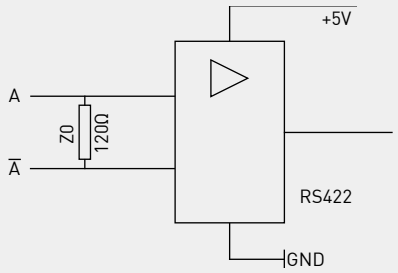
B-channel	
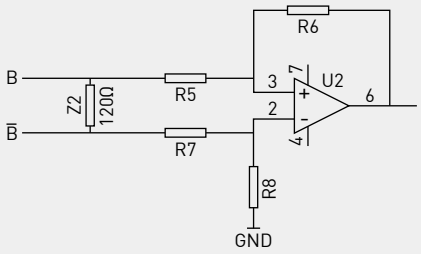	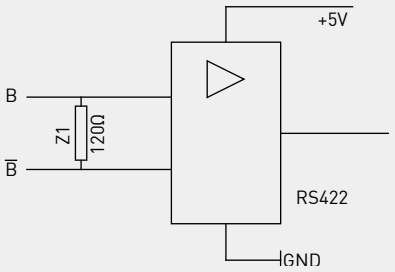
Reference-channel	
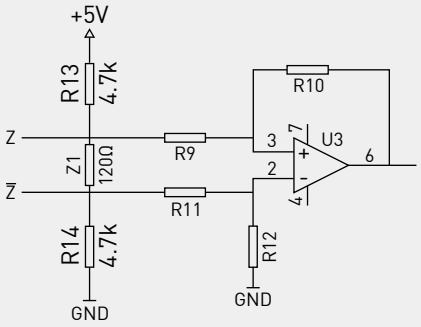	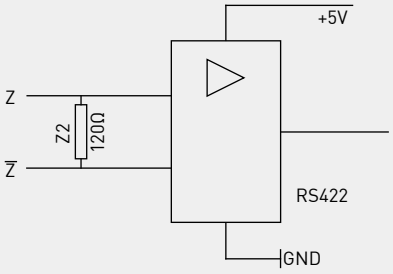

3.7 Gap-Repeatability Relationship:

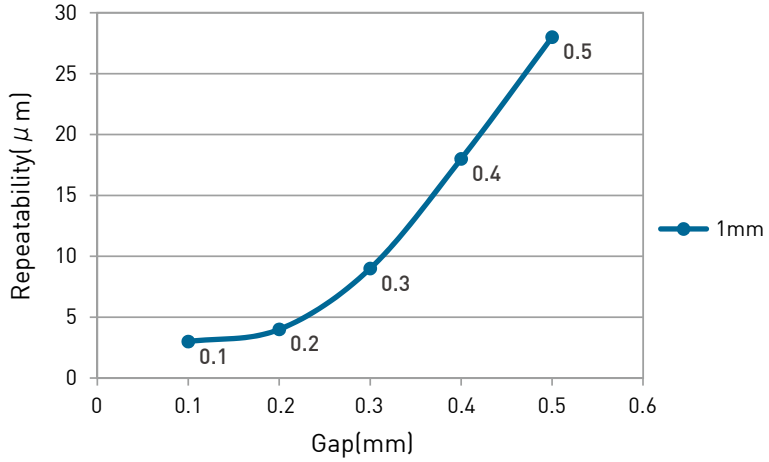

+7 (499) 707–71–08
+7 (812) 385–42–35
+7 (831) 281–18–21

4. Positioning Measurement- PG Type

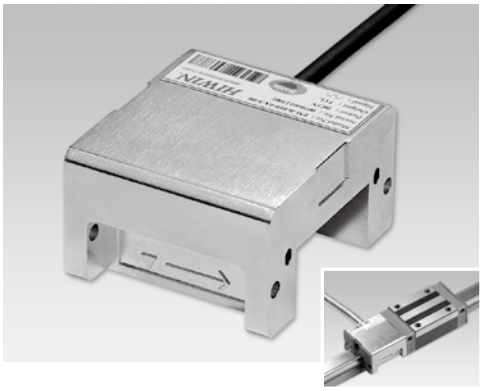

Features:

- Digital or analog signal output available
- Compact design and compatible with HIWIN linear guideways
- Cost-effective and reliable
- Optimal solution for automation equipment that requires precise position feedback
- Resolution up to 1 μ m.
- Repeatability up to ±2 μ m.
- Available gap up to 0.4mm.

4.1 Specifications:

Pole Pitch	1mm	
Available gap[1]	0.4mm	
Signal format	Analogue	Digital
Output signal	SIN/COS 1Vp-p	5V TTL/RS422
Resolution	1mm	1μm
Repeatability[2]	±3μm	±2μm
Reference signal	1 mm/pulse	
Maximum travel speed	10m/sec	5m/sec
Input voltage	5VDC±5%	
Operating temperature	0℃~50℃	
Storage temperature	-5℃~70℃	
Protection class	IP67	

Note: (1) Please refer Chap 4.7 for Gap-Repeatability relationship.
(2) The data were measured while gap is 0.1mm.

4.2 Ordering Code:

PM - B- 01 – X X – G - XX - XX

PM：Positioning Measurement

Pole Pitch
B：1mm

Cable Length: (Unit:m; Max 10m)
01：1M
02：2M
⋮
10：10M

10:Standard
11:With metal tube

20: for PGH20 guideway system
25: for PGH25 guideway system

Housing:
G:PG type

Signal Format:
A:Analogue SIN/COS 1Vp-p
D:Digital 5V RS422/TTL

Connector:
0: Flying lead
1:SCSI 20 Pin
2:SCSI 14 Pin
3:D-Sub 15 Pin
4:17 Pin Circular Plug (M17)
5:SCSI 14 Pin (screw type)
6:D-sub VGA 15 Pin

4.3 Dimensions:

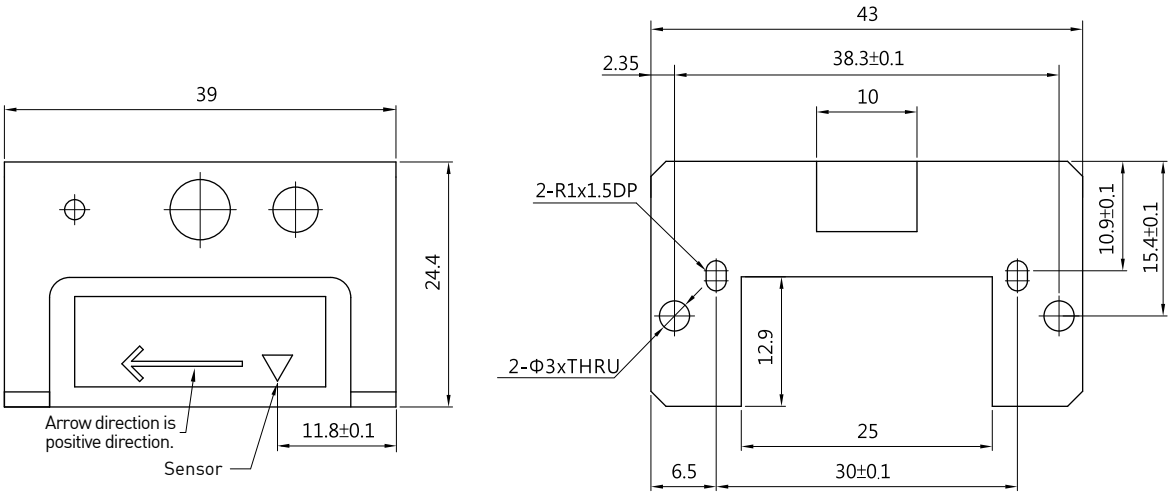

※Note:These dimensions are suitable for HIWIN PGH20 linear guideway.

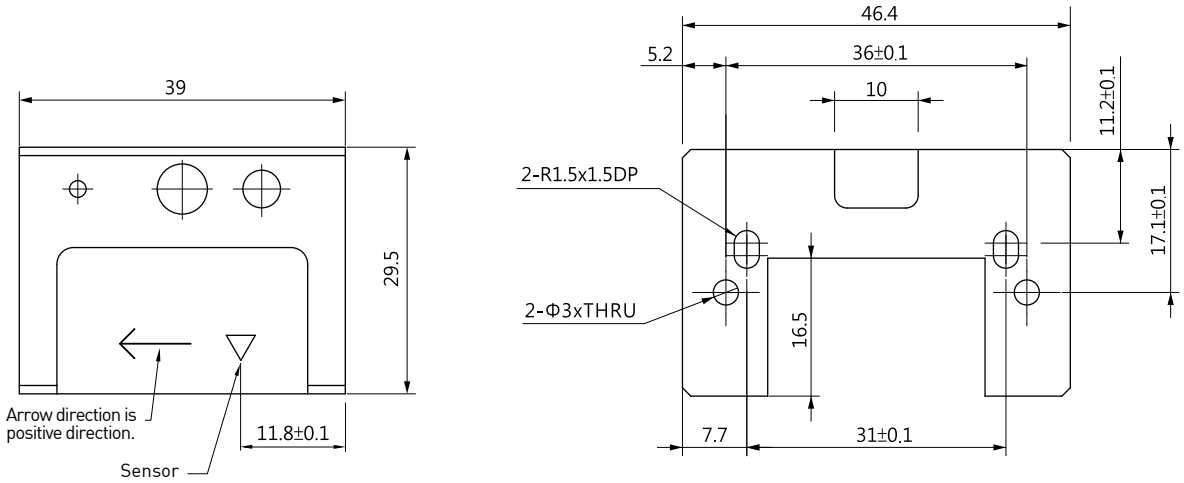

※Note:These dimensions are suitable for HIWIN PGH25 linear guideway.

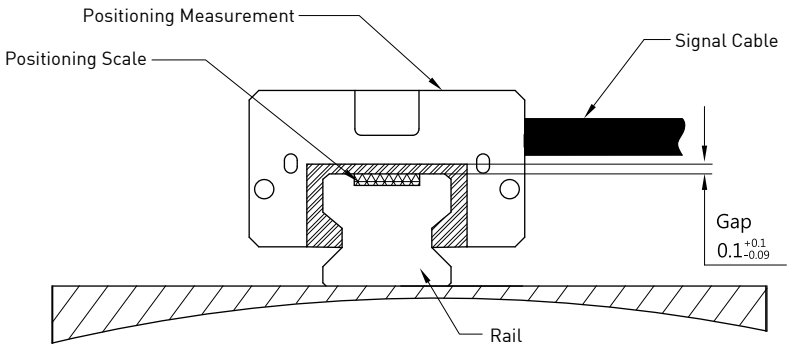

Unit : mm

+7 (499) 707–71–08
+7 (812) 385–42–35
+7 (831) 281–18–21

4.4 Pin Assignment:

Function	Signal		Color	Connector (male) (SCSI 14 Pin) Analogue	Connector (male) (SCSI 20 Pin)		Connector (male) (D-Sub 15 Pin)		Connector (male) [1] (17 Pin Circular Plug)	Connector (male) (D-Sub VGA 15 Pin)		Flying Lead
	Analogue	Digital			Analogue	Digital	Analogue	Digital		Analogue	Digital	
Power	5VDC		Brown	1	3	3	4	7	4/5	1	1	Brown
	GND		White	8	2	2	12	2	12/13	2	2	White
Output Signal	SIN+	A+	Green	10	16	4	9	14	9	11	3	Green
	SIN-	A-	Yellow	11	17	5	1	6	1	12	9	Yellow
	COS+	B+	Blue	3	18	6	10	13	10	13	4	Blue
	COS-	B-	Red	4	19	7	2	5	2	14	10	Red
Reference Signal	REF+	Z+	Purple	5	8	8	3	12	3	7	7	Purple
	REF-	Z-	Gray	6	9	9	11	4	11	8	8	Gray
Shield				Case	1/Case		Case		Case	Case		

Note: (1)17 Pin Circular Plug; Brnad: INTERCONTEC; P/N:AKU874MR1087004A000

4.5 Signal Format:

SIN/COS 1Vp-p

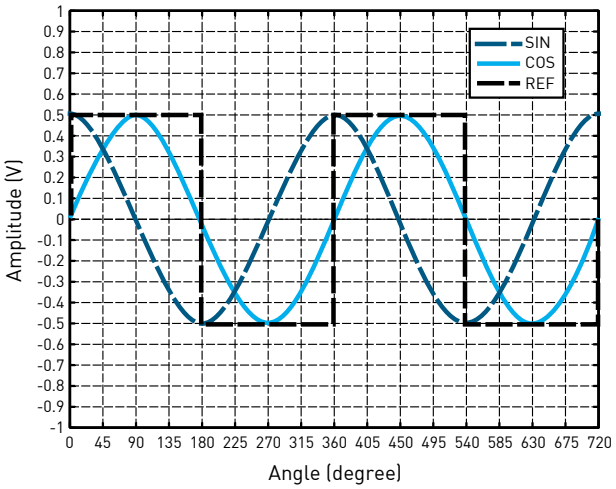

5V TTL/RS422

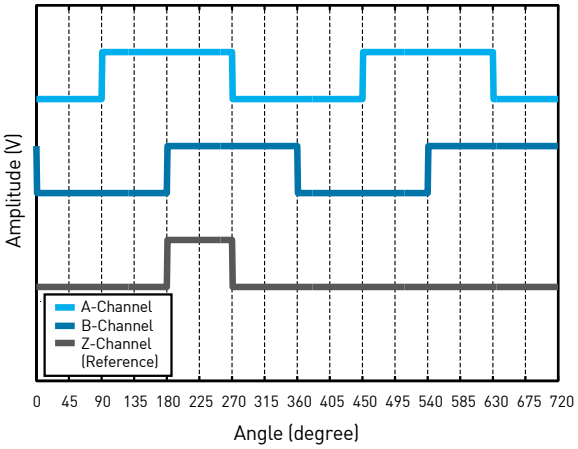

+7 (499) 707–71–08
+7 (812) 385–42–35
+7 (831) 281–18–21

4.6 Recommended Input Circuit:

SIN/COS 1Vp-p	5V TTL/RS422
A-channel	
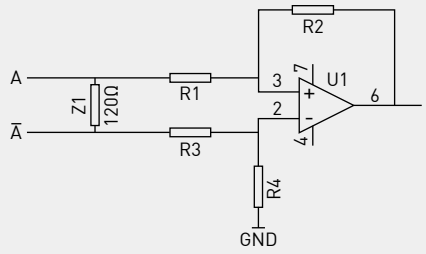	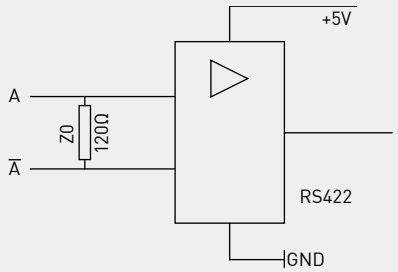
B-channel	
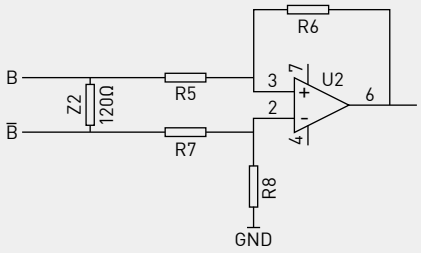	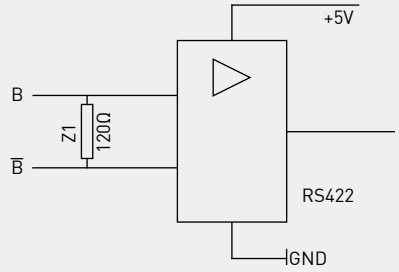
Reference-channel	
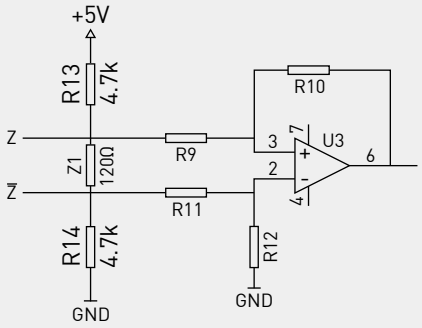	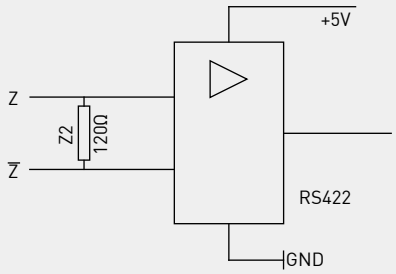

4.7 Gap-Repeatability Relationship:

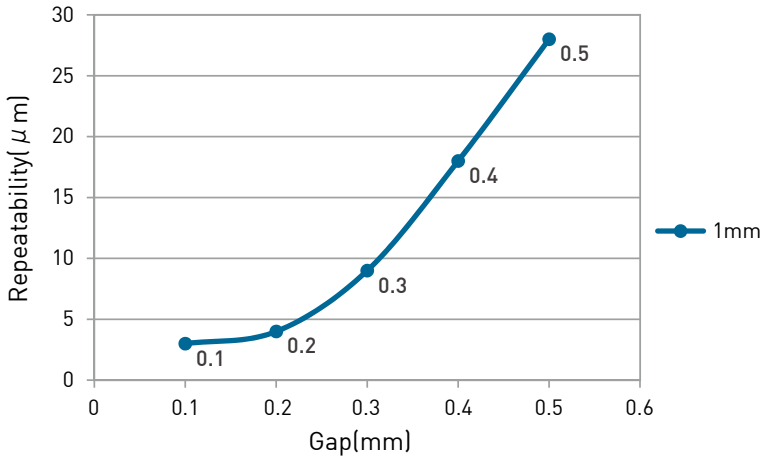

+7 (499) 707–71–08
+7 (812) 385–42–35
+7 (831) 281–18–21

5. Positioning Measurement- Vertical Type

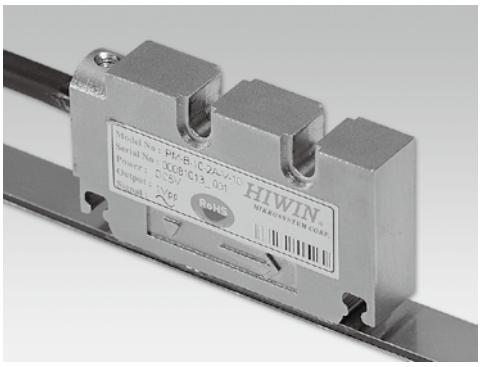

Features:

- Digital or Analog signal output available
- Vertical shape, optimal for space-saving applications
- Optional metal protection tube
- Resolution up to 1 μ m.
- Repeatability up to ±2 μ m.
- Available gap up to 4mm.

5.1 Specifications:

Pole Pitch	1mm		5mm	
Available gap[1]	0.4mm		4mm	
Signal format	Analogue	Digital	Digital	
Output signal	SIN/COS 1Vp-p	5V TTL/RS422	5V TTL/RS422	24V/PP
Resolution[3]	1mm	1μm	5μm	5μm
Repeatability[2]	±3μm	±2μm	±10μm	±10μm
Reference signal	2 mm/pulse	1 mm/pulse	5 mm/pulse	
Maximum travel speed	10m/sec	5m/sec	5m/sec	8m/sec
Input voltage	5VDC±5%			24VDC±10%
Operating temperature	0°C~50°C			
Storage temperature	-5°C~70°C			
Protection class	IP67			

Note: (1) Please refer Chap 5.7 for Gap-Repeatability relationship.
(2) The data of 1mm encoder were measured while gap is 0.1mm; And the data of 5mm encoder were measured while gap is 1mm
(3) If you have other request on resolution, please do not hesitate to contact us.

5.2 Ordering Code:

PM - B- 01 – X X – V - X X

PM:
Positioning Measurement

Pole Pitch
A：5mm
B：1mm

Cable Length: (Unit:m; Max 10m)
01：1M
02：2M
⋮
10：10M

	PM-B	PM-A
0	Standard	Standard
1	With metal tube	With metal tube
2		With scraper
3		With metal tube and scraper

	PM-B	PM-A
1	Analogue: 1Vp-p 1mm	
	Digital: 5V RS422/TTL 1μm	Digital: 5V RS422/TTL 5μm
3	Digital: 24V/PP 1μm	Digital: 24V/PP 5μm
4		Digital: 5V RS422/TTL 10μm
5		Digital: 24V/PP 10μm
7		Digital: 24V/PP 25μm
8		Digital: 24V/PP 100μm

Housing:
V:Vertical type

Signal Format:
A:Analogue SIN/COS 1Vp-p
D:Digital

Connector:
0: Flying lead
1:SCSI 20 Pin
2:SCSI 14 Pin
3:D-Sub 15 Pin
4:17 Pin Circular Plug (M17)
5:SCSI 14 Pin (screw type)
6:D-sub VGA 15 Pin
7:D-sub 9 Pin

5.3 Dimensions:

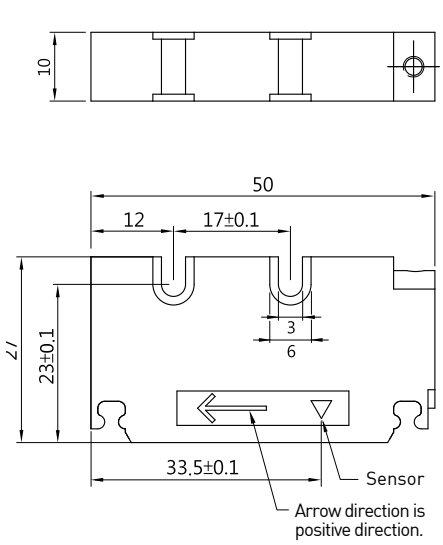

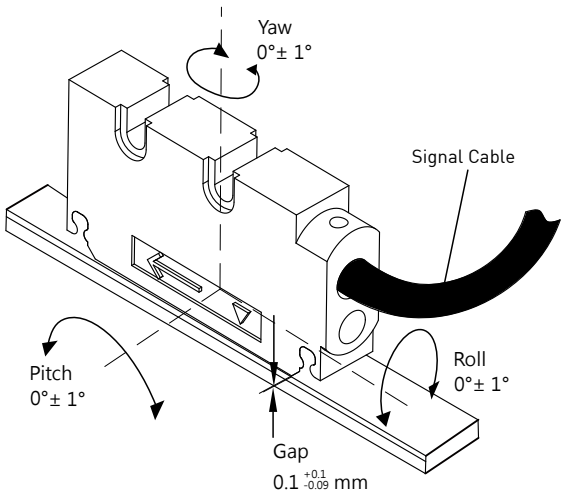

Unit : mm

PROMXOLDING
+7 (499) 707–71–08
+7 (812) 385–42–35
+7 (831) 281–18–21

5.4 Pin Assignment:

5V TTL/RS422

Function	Signal		Color	Connector (male) (SCSI 14 Pin) Analogue	Connector (male) (SCSI 20 Pin)		Connector (male) (D-Sub 15 Pin)		Connector (male) [1] (17 Pin Circular Plug)	Connector (male) (D-Sub VGA 15 Pin)		Flying Lead
	Analogue	Digital			Analogue	Digital	Analogue	Digital		Analogue	Digital	
Power	5VDC		Brown	1	3	3	4	7	4/5	1	1	Brown
	GND		White	8	2	2	12	2	12/13	2	2	White
Output Signal	SIN+	A+	Green	10	16	4	9	14	9	11	3	Green
	SIN-	A-	Yellow	11	17	5	1	6	1	12	9	Yellow
	COS+	B+	Blue	3	18	6	10	13	10	13	4	Blue
	COS-	B-	Red	4	19	7	2	5	2	14	10	Red
Reference Signal	REF+	Z+	Purple	5	8	8	3	12	3	7	7	Purple
	REF-	Z-	Gray	6	9	9	11	4	11	8	8	Gray
Shield				Case	1/Case		Case		Case	Case		

Note: (1)17 Pin Circular Plug; Brnad: INTERCONTEC; P/N:AKU874MR1087004A000

24V/PP

Function	Signal	Color	Connector (male) (D-Sub 9 Pin)	Flying Lead
	Digital		Digital	
Power	24V	Brown	2	Brown
	0V	White	1	White
Output Signal	A(PP)	Green	3	Green
	/A(PP)	Yellow	8	Yellow
	B(PP)	Blue	4	Blue
	/B(PP)	Red	7	Red
Reference Signal	Z+	Purple	5	Purple
	Z-	Gray	9	Gray
Shield			Case	

5.5 Signal Format:

SIN/COS 1Vp-p

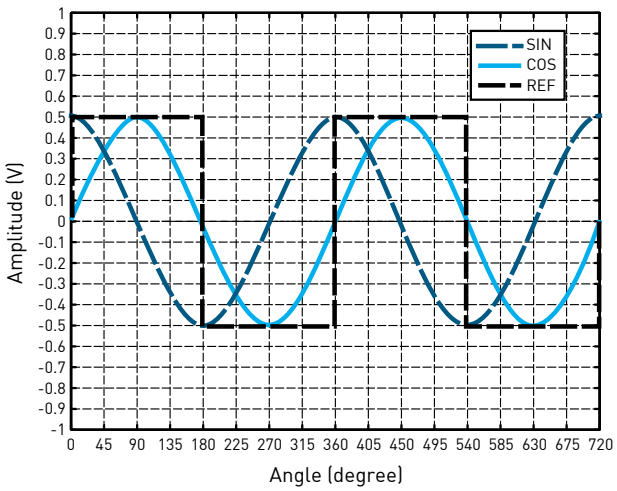

5V TTL/RS422

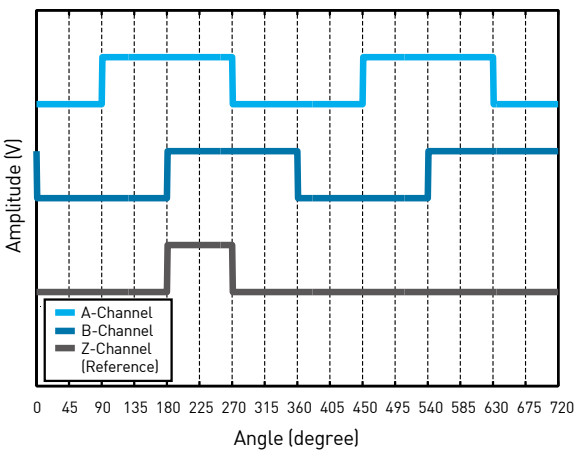

+7 (499) 707–71–08
+7 (812) 385–42–35
+7 (831) 281–18–21

5.6 Recommended Input Circuit:

SIN/COS 1Vp-p	5V TTL/RS422
A-channel	
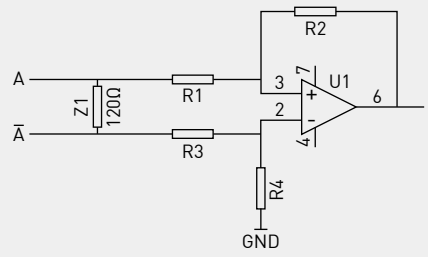	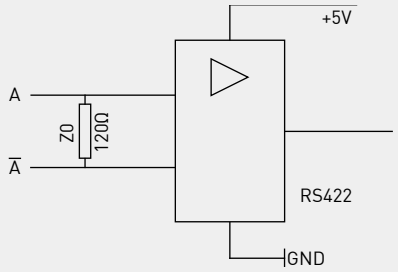
B-channel	
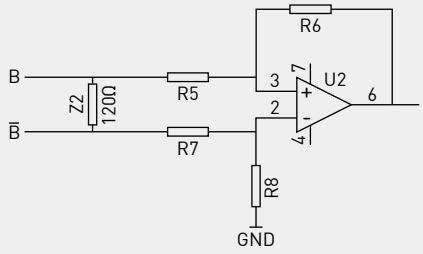	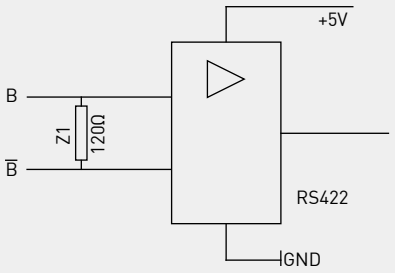
Reference-channel	
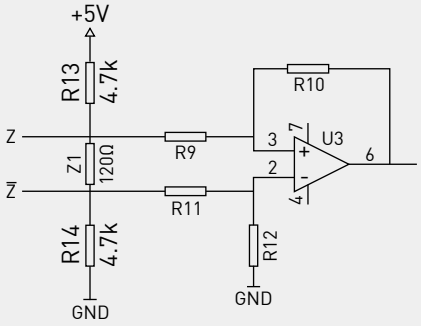	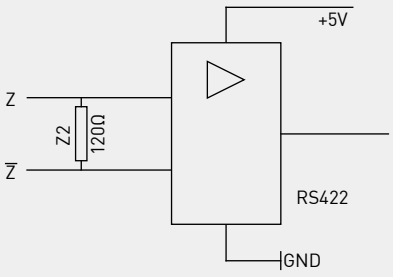

5.7 Gap-Repeatability Relationship:

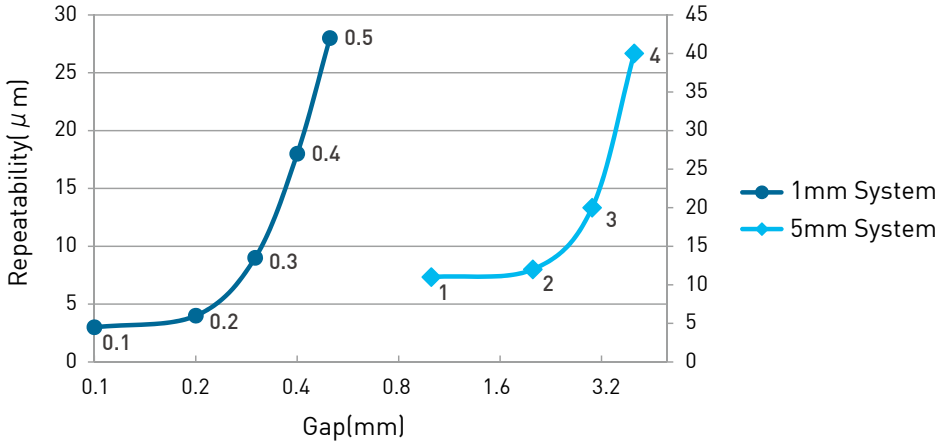

PROMXOLDING
+7 (499) 707–71–08
+7 (812) 385–42–35
+7 (831) 281–18–21

6. Positioning Measurement- E Type

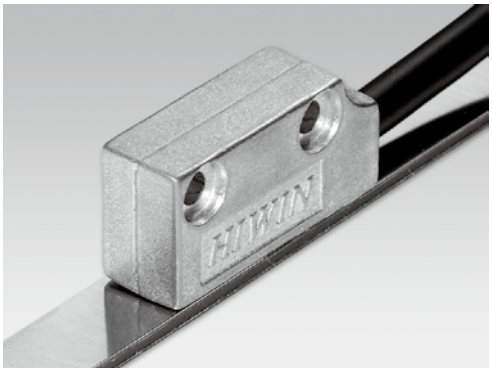

Features:

- Analog signal output
- Optimal for space-saving applications
- Dustproof and waterproof, up to IP67 protection class
- Resolution is up to 5 μ m while integrating with ST-A.
- Repeatability up to ±10 μ m.
- Available gap up to 4mm.

6.1 Specifications:

Pole Pitch	5mm
Available gap[1]	4mm
Signal format	Analogue
Output signal	SIN/COS 50mVp-p
Resolution	5mm
Repeatability[2]	±10μm
Maximum travel speed	10m/sec
Input voltage	5VDC±5%
Operating temperature	0˚C~50˚C
Storage temperature	-5˚C~70˚C
Protection class	IP67

Note: (1) Please refer Chap 6.5 for Gap-Repeatability relationship.
(2) The data were measured while gap is 1mm.

6.2 Ordering Code:

PM - A- 01 – X X – E - XX

PM : Positioning Measurement

Pole Pitch
A : 5mm

Cable Length: (Unit:m; Max 10m)
01 : 1M
02 : 2M
⋮
10 : 10M

00:Standard

Housing:
E:E type

Signal Format:
A:Analogue SIN/COS 50mVp-p

Connector:
2:SCSI 14 Pin
5:SCSI 14 Pin (screw type)
6:D-sub VGA 15 Pin

6.3 Dimensions:

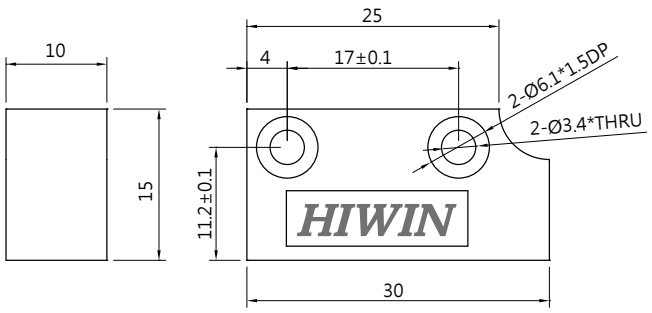

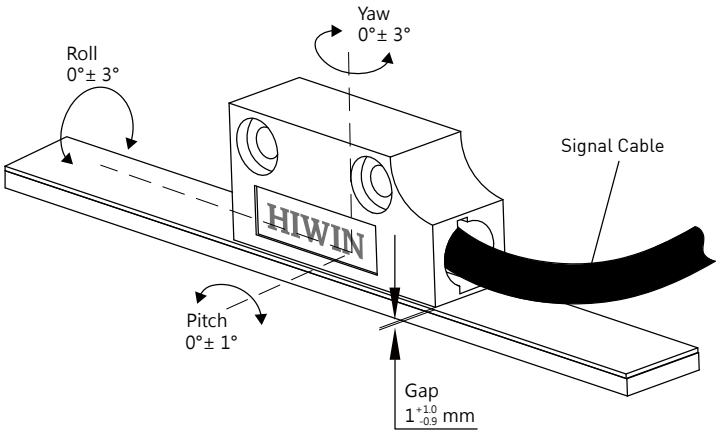

6.4 Pin Assignment:

Function	Signal	Color	Connector (male) (SCSI 14 Pin)	Connector (male) (D-Sub VGA 15 Pin)
	Analogue		Analogue	Analogue
Power	5V	Brown	1	1
	0V	White	8	2
Output Signal	SIN+	Green	10	11
	SIN-	Yellow	11	12
	COS+	Blue	3	13
	COS-	Red	4	14
Shield			Case	Case

6.5 Gap-Repeatability Relationship:

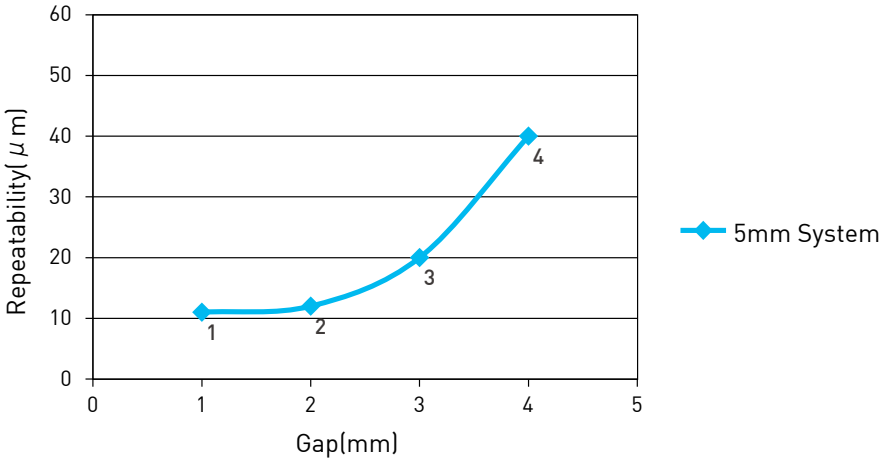

+7 (499) 707–71–08
+7 (812) 385–42–35
+7 (831) 281–18–21

7. Positioning Measurement- H Type

Features:

- Analog signal output
- Compact design used with Hiwin linear guideways
- Optimal for space-saving applications
- Easy installation
- Resolution is up to 5 μ m when integrating with ST-A.
- Repeatability up to ±10 μ m.
- Available gap up to 4mm.

7.1 規格：

Pole Pitch	5mm
Available gap[1]	4mm
Signal format	Analogue
Output signal	SIN/COS 50mVp-p
Resolution	5mm
Repeatability[2]	±10μm
Maximum travel speed	10m/sec
Input voltage	5VDC±5%
Operating temperature	0˚C~50˚C
Storage temperature	-5˚C~70˚C
Protection class	IP67

Note: (1) Please refer Chap 7.5 for Gap-Repeatability relationship.
(2) The data were measured while gap is 1mm.

7.2 Ordering Code:

PM - A- 01 – X X – H - XX

PM : Positioning Measurement

Pole Pitch
A : 5mm

Cable Length: (Unit:m; Max 10m)
01 : 1M
02 : 2M
⋮
10 : 10M

20: for PGH20 guideway system
25: for PGH25 guideway system
30: for PGH30 guideway system
35: for PGH35 guideway system
45: for PGH45 guideway system

Housing:
H:H type

Signal Format:
A:Analogue SIN/COS 50mVp-p

Connector:
2:SCSI 14 Pin
5:SCSI 14 Pin (screw type)
6:D-sub VGA 15 Pin

7.3 Dimensions:

This type is used with HIWIN's guideway, please refer Page 181 to 185 of HIWIN Technology's catalogue for further details :
http://www.hiwin.tw/download/tech_doc/gw/Linear%20Guideway-(E).pdf

7.4 Pin Assignment:

Function	Signal	Color	Connector (male) (SCSI 14 Pin)	Connector (male) (D-Sub VGA 15 Pin)
	Analogue		Analogue	Analogue
Power	5V	Brown	1	1
	0V	White	8	2
Output Signal	SIN+	Green	10	11
	SIN-	Yellow	11	12
	COS+	Blue	3	13
	COS-	Red	4	14
Shield			Case	Case

7.5 Gap-Repeatability Relationship:

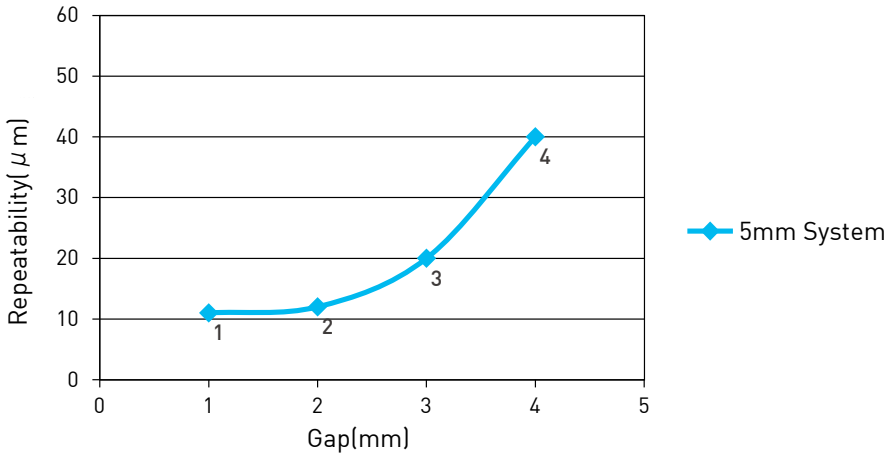

+7 (499) 707–71–08
+7 (812) 385–42–35
+7 (831) 281–18–21

II. Signal Translator

ST-A

Features:

- Converting an analog signal input into a digital signal output
- Output signal 5V RS422/TTL or open collector
- Suitable for precise position feedback to a PC or PLC connection

1. Specifications:

Type	ST-A			
Pole Pitch	5mm			
Input signal	SIN/COS 50mVp-p			
Output signal	5V RS422/TTL		24V O.C.	
Resolution	5μm	10μm	5μm	10μm
Repeatability	±10μm	±20um	±10μm	±20um
Maximum output frequency	64KHz	32KHz	64KHz	32KHz
Maximum travel speed	1.5m/sec			
Input voltage	5VDC±5% /0.5A			
Operating temperature	0˚C~50˚C			
Storage temperature	-5˚C~70˚C			
Protection class	IP43			

2. Ordering Code:

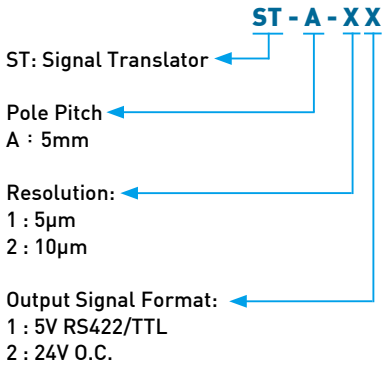

3. Dimensions:

ST-A

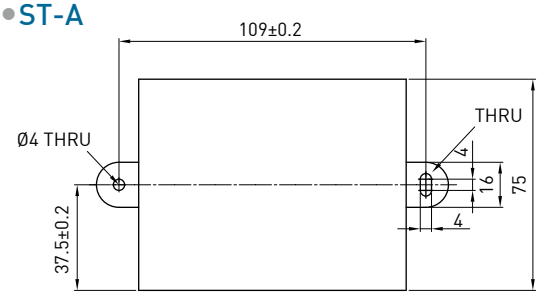

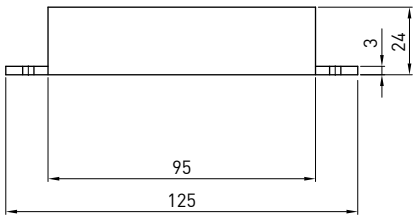

4. Pin Assignment:

ST-A-□1(5V RS422/TTL)

D-sub 9 pin definition for signal output connector

Function	Signal	Connector(male) (D-sub 9 pin)	I/O
Power	GND	1	I
	DC5V	2	
	SGND	6	
Output Signal	A+	3	O
	A-	8	
	B+	4	
	B-	7	

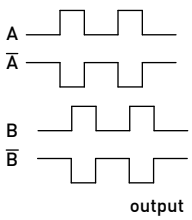

Wiring

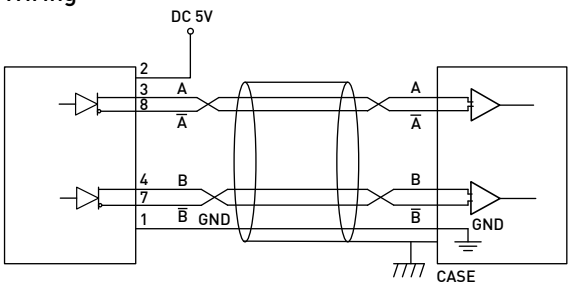

ST-A signal translator

Differntial signal input to drive

ST-A-□2(24V O.C.)

D-sub 9 pin definition for signal output connector

Function	Signal	Connector(male) (D-sub 9 pin)	I/O
Power	GND	1	I
	DC24V	2	
	SGND	6	
Output Signal	A(open collector)	8	O
	B(open collector)	7	
	A(TTL level)	3	
	B(TTL level)	4	

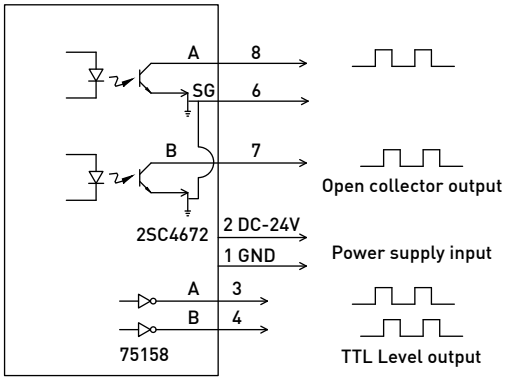

Wiring

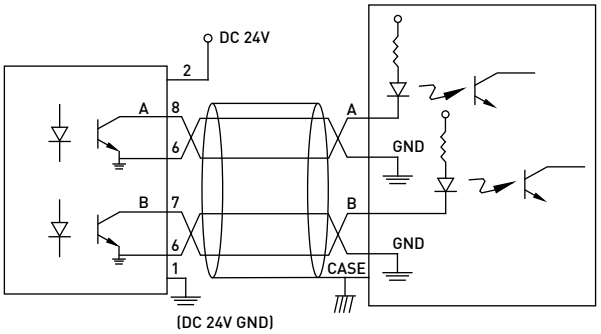

ST-A signal translator

PLC Counter signal

PROMXOLDING

+7 (499) 707–71–08
+7 (812) 385–42–35
+7 (831) 281–18–21

PROMXOLDING
+7 (499) 707–71–08
+7 (812) 385–42–35
+7 (831) 281–18–21

III. High-precision Enclosed Positioning Measurement System

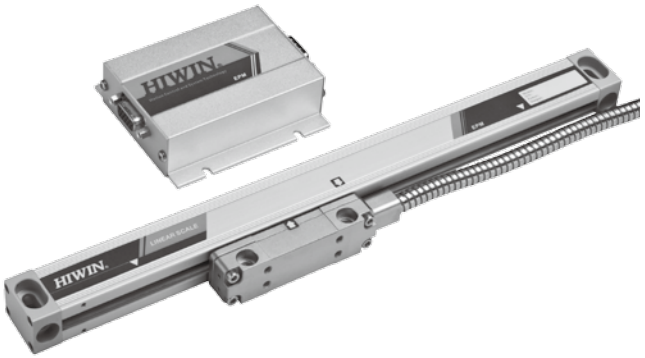

Features:

- Magnetic sensing mechanism
- Accuracy: (5+5ML/1000) μ m
- Resolution up to 1 μ m
- With single index signal
- Simple design and easily mounted
- Superior environmental susceptibility agaist oil, water and dust.
- IP65 protection class.

1. Specifications:

Measuring length (ML,unit:mm)		50、100、150、200	250、300、350、400、450、500、550、600、650、750、850、950、1050
Maximum travel(Unit: mm)		ML+104	ML+120
Overall length(Unit: mm)		ML+12	ML+28
Accuracy@20˚C		(5+5ML/1000) μ m	
		Within Measuring Length is 30 μ m	
Resolution		1μm	
Signal format		Digital	
Output signal		5V TTL/RS422	
Reference point		Standard: Center point/Edge(at 25 mm away from edge of ML)	
		User-selected point	
Maximum travel speed		1.2m/sec	
Mounting parallelism		±0.1mm	
Input voltage		5VDC±5% / 0.23A	
Coefficient of linear thermal expansion		$(11.8\pm0.6)\times10^{(-6)}$m/K	
Operating temperature		0˚C~50˚C	
Storage temperature		-20˚C~60˚C	
Protection class	Readhead	IP67	
	Translator	IP30	
Vibration resistance (50Hz～2000Hz)		150m/S^2(EN60068-2-6)	
Impact resistance(11ms)		1000m/S^2(EN60068-2-27)	

PROMXOLDING
+7 (499) 707–71–08
+7 (812) 385–42–35
+7 (831) 281–18–21

2. Ordering Code:

EPM - 1050- M – H1 – 7 - 1

EPM:
Enclosed Positioning Measurement

Measuring Length
0050：50mm
0100：100mm
0150：150mm
0200：200mm
0250：250mm
0350：350mm
0400：400mm
0450：450mm
0500：500mm
0550：550mm
0600：600mm
0650：650mm
0750：750mm
0850：850mm
0950：950mm
1050：1050mm

Reference Point: (Note1)
M: Center point
S: Edge(at 25 mm away from edge of ML)
C: User-selected point

Cable Outlet (Note2)
1:With interconnected cable, round waterproof connector (IP68)
2:With interconnected cable, D-sub VGA 15 pin
3:Directly connected cable, D-sub VGA 15 pin

Cable Length (Unit:m)
3 : 3m
5 : 5m
7 : 7m

Accuracy-Resolution-Output signal:
H1:(5+5ML/1000) μ m-1 μ m-5V TTL/RS422
D1:Within measuring length is 30 μ m-1 μ m-5V TTL/RS422
※ML:Measuring Length

※Note1: Reference point

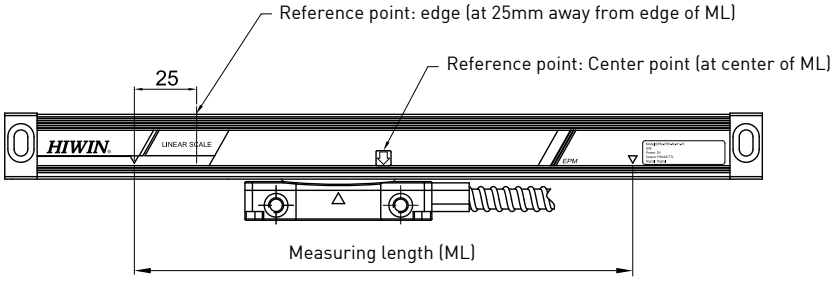

※Note2: Cable outlet

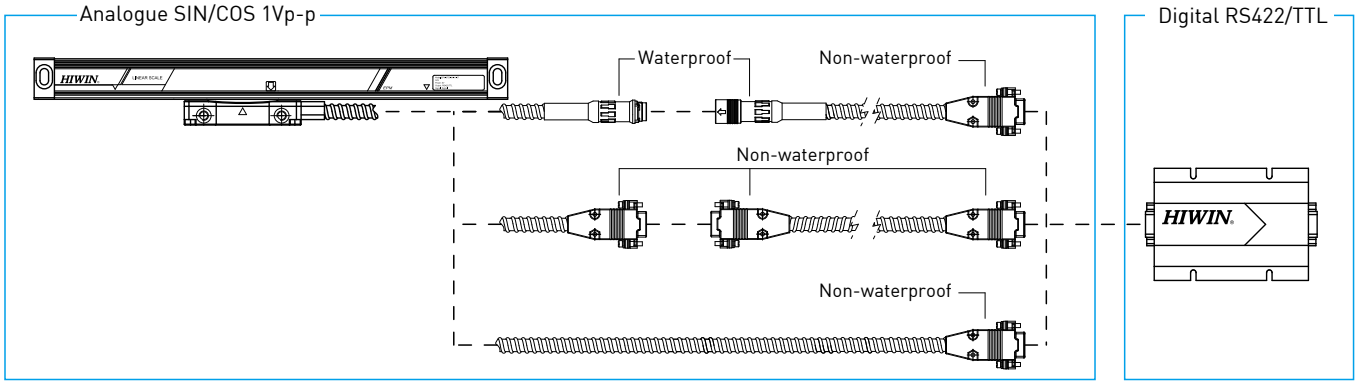

PROMXOLDING
+7 (499) 707–71–08
+7 (812) 385–42–35
+7 (831) 281–18–21

3. Dimensions:

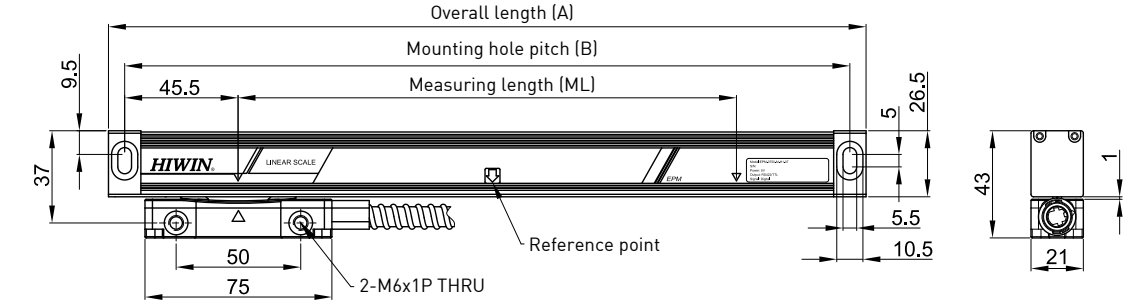

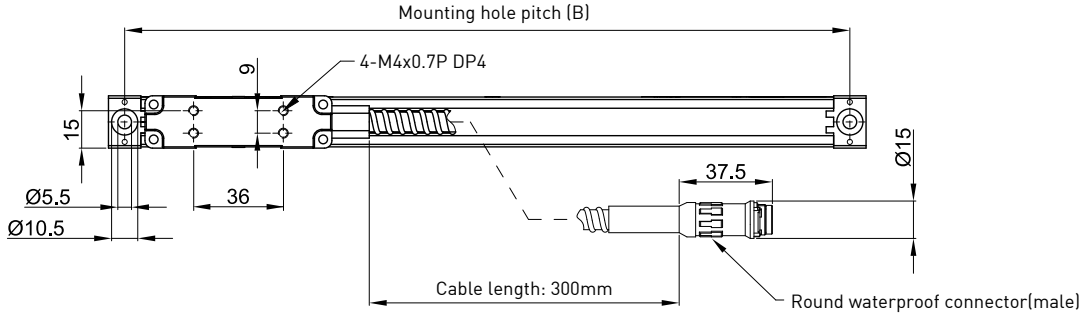

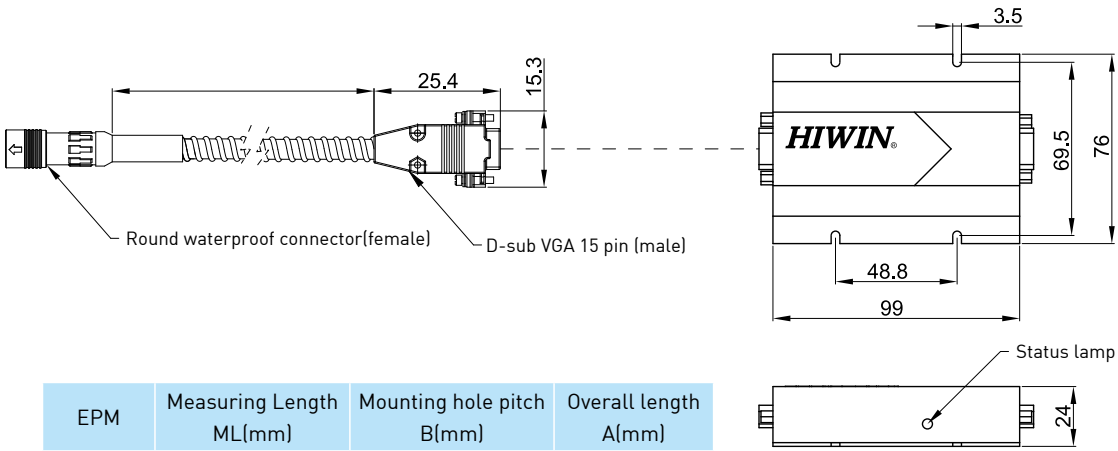

EPM	Measuring Length ML(mm)	Mounting hole pitch B(mm)	Overall length A(mm)
EPM-0050	50	141	154
EPM-0100	100	191	204
EPM-0150	150	241	254
EPM-0200	200	291	304
EPM-0250	250	357	370
EPM-0300	300	407	420
EPM-0350	350	457	470
EPM-0400	400	507	520
EPM-0450	450	557	570
EPM-0500	500	607	620
EPM-0550	550	657	670
EPM-0600	600	707	720
EPM-0650	650	757	770
EPM-0750	750	857	870
EPM-0850	850	957	970
EPM-0950	950	1057	1070
EPM-1050	1050	1157	1170

PROMXOLDING
+7 (499) 707–71–08
+7 (812) 385–42–35
+7 (831) 281–18–21

4. Pin Assignment:

Function	Signal		Color	Connector (male) (D –sub VGA 15 pin)	Connector (male) (D –sub 9 pin)
	Analogue	Digital		Analogue	Digital
Power	5V		Brown	1	2
	0V		White	2	1
Output Signal	SIN+	A+	Green	11	3
	SIN-	A-	Yellow	12	8
	COS+	B+	Blue	13	4
	COS-	B-	Red	14	7
Reference Signal	REF+	Z+	Purple	7	5
	REF-	Z-	Gray	8	9
Fault Detection Signal	FLT	-	-	-	6
Shield	-	-	-	Case	Case

IV. High Efficiency Counter

1. Micro LCD Counter

Features:

- LCD display, using 2 AA batteries
- Embedded head, suitable for cutting and wood-processing machines
- Parameter save function
- Extremely compact, easily mounted, and cost-effective.

1.1 Specifications:

Display		8 digits LCD display with +/- sign
Accuracy@20°C		±(80+15xL) μm (L: Length (unit: m))
Resolution		5μm
Repeatability[1]		±10μm
Operating speed		3m/sec (maximum 2G acceleration)
Input voltage		commercial AA No.3 batteries × 2
Battery life[2]		1 year by setting speed at 1.5m/s
Operating Temperature		0°C~50°C
Storage Temperature		-5°C~55°C
Protection class	Scale/Readhead	IP67
	Counter	IP43
Function	General	Set reading direction
		Unit conversion (mm/inch/°)
		Absolute/Incremental position(INC/ABS) selection
		Set display digits
		Set reference points
		5 sets of maximum velocity settings (default: 1.5m/s)
	Programmable	Anglular measurement radius setting (minimum: 50mm)
		5 sets of programmable compensation reference points
		set programmable coefficient ratio
	Display	Indicate installed condition
		Power monitor and display
	Other	Keypad lock
		Parameter save function
		5 sets of independant incremental counters for relative measurement.

Note: (1) The data were measured while gap is 1mm.
(2) Battery capacity is 2200mAh(ambient temperature: 20+/-5°C).
Capacity performance will vary under different environmental temperatures.

PROMXOLDING
+7 (499) 707–71–08
+7 (812) 385–42–35
+7 (831) 281–18–21

1.2 Ordering Code:

UPLD - A - XX - X - XX

UPLD:Micro LCD Counter

Pole Pitch
A：5mm

Cable Length: (Unit:m; Max 3m)
01：1M
02：2M
⋮
03：3M

00:Standard (E type readhead)
20: for PGH20 guideway system
25: for PGH25 guideway system
30: for PGH30 guideway system
35: for PGH35 guideway system
45: for PGH45 guideway system

Housing:
E:E type
H:H type

1.3 Dimensions:

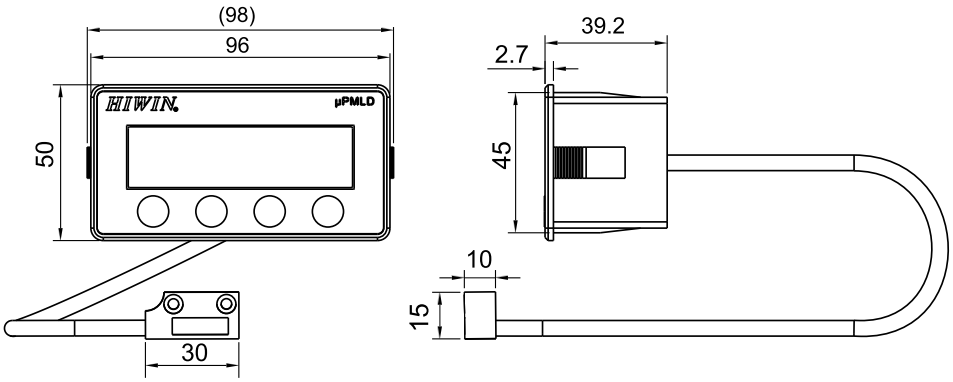

Reference design dimensions for fram panel cut-out

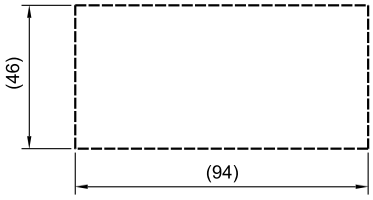

Unit: mm

PROMXOLDING
+7 (499) 707–71–08
+7 (812) 385–42–35
+7 (831) 281–18–21

2. LCD Counter System

Features:

- LCD display, using 2 AA batteries
- Embedded head, suitable for cutting and wood-processing machines
- Parameter save function
- Extremely compact, easily mounted, and cost-effective.

2.1 Specifications:

Display		8 digits LCD display with +/- sign
Accuracy@20˚C		±(80+15xL) μm (L: Length (unit: m))
Resolution		5μm
Repeatability[1]		±10μm
Operating speed		3m/sec (maximum 2G acceleration)
Input voltage		commercial AA No.3 batteries × 2
Battery life[2]		1 year by setting speed at 1.5m/s
Operating Temperature		0˚C~50˚C
Storage Temperature		-5˚C~70˚C
Protection class	Scale/Readhead	IP67
	Counter	IP43
Function	General	Set reading direction
		Unit conversion (mm/inch/°)
		Absolute/Incremental position(INC/ABS) selection
		Set display digits
		Set reference points
		5 sets of maximum velocity settings (default: 1.5m/s)
	Programmable	Anglular measurement radius setting (minimum: 50mm)
		5 sets of programmable compensation reference points
		set programmable coefficient ratio
	Display	Indicate installed condition
		Power monitor and display
	Other	Keypad lock
		Parameter save function
		5 sets of independant incremental counters for relative measurement.

Note: (1) The data were measured while gap is 1mm.
(2) Battery capacity is 2200mAh(ambient temperature: 20+/-5˚C).
Capacity performance will vary under different environmental temperatures.

+7 (499) 707–71–08
+7 (812) 385–42–35
+7 (831) 281–18–21

2.2 Ordering Code:

PMLD - A - XX - X - XX

PMLD:LCD Counter System

Pole Pitch
A：5mm

Cable Length: (Unit:m; Max 3m)
01：1M
02：2M
⋮
03：3M

00:Standard (E type readhead)
20: for PGH20 guideway system
25: for PGH25 guideway system
30: for PGH30 guideway system
35: for PGH35 guideway system
45: for PGH45 guideway system

Housing:
E:E type
H:H type

2.3 Dimensions:

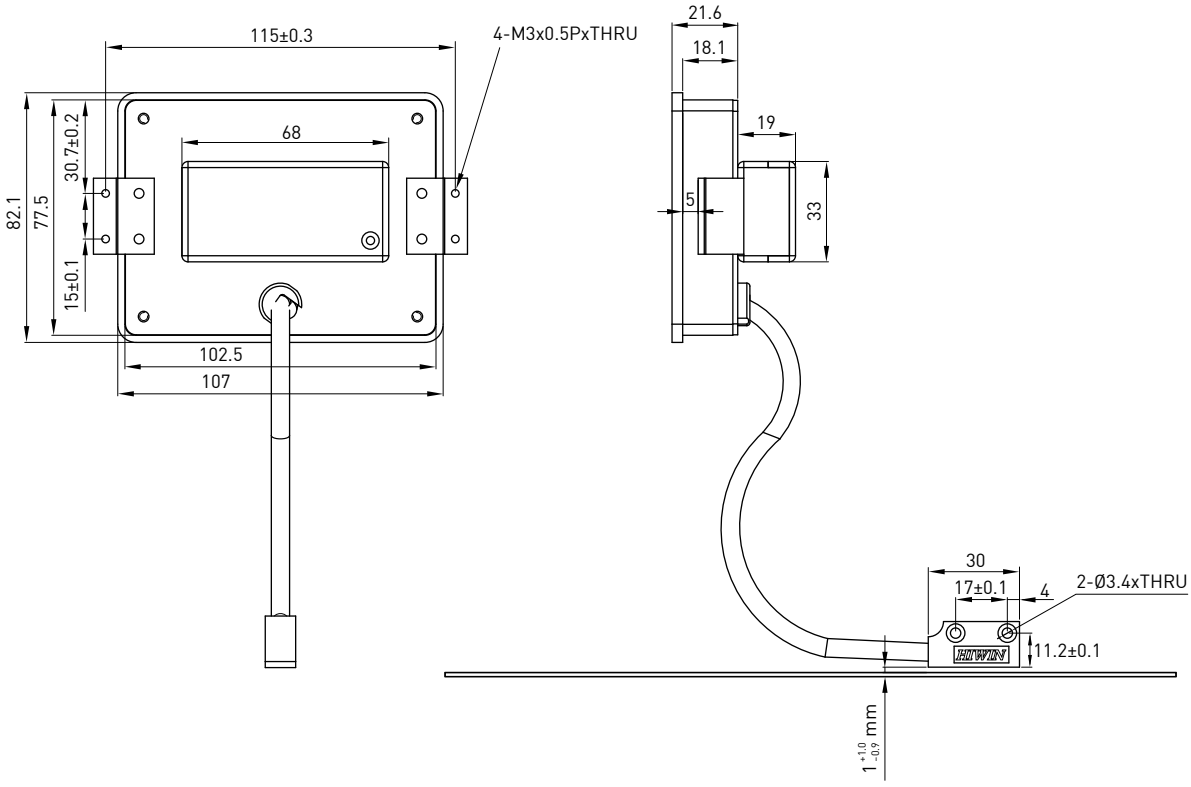

Unit: mm

PROMXOLDING
+7 (499) 707–71–08
+7 (812) 385–42–35
+7 (831) 281–18–21

3. High Efficiency Single Axis Counter

Features:

- LED display
- Can be used with other digital optical encoders
- Consists of multiple output interfaces
- Suitable for cutting and wood-processing machines
- Compact design and easy installation

3.1 Specifications:

Display		8 digit LED display
Resolution		1μm、2μm、5μm、10μm
Input signal		analogue: SIN/COS 1Vp-p; speed 2m/s, 2kHz
		digital: 5V TTL/RS422; speed 2m/s, 0.5MHz
Input voltage		5VDC±5% 1A (AC100～240V/ 5VDC)
Relay contact rating		24VDC/2A
Operating Temperature		0˚C~50˚C
Storage Temperature		-5˚C~70˚C
Protection class	Display	IP43
Function	General	Set reading direction
		Unit conversion (mm/inch)
		Absolute/Incremental position(INC/ABS) selection
		Set display digits (mm：0.001, 0.01, 0.1, inch：0.000001, 0.00001, 0.0001, 0.001)
		Input signal conversion (Digital/Analogue)
		Coordinate zero setting and auto-center (1/2) function
	Other	8 sets of preset function
		4 sets of relay output function
		Instant power failure memory
		RS-232 output (optional)

PROMXOLDING
+7 (499) 707–71–08
+7 (812) 385–42–35
+7 (831) 281–18–21

3.2 Ordering Code:

PMED – H1 - 1 - XX - X

PMED:
High Efficiency Single Axis Counter

H1:H1 display(Plug type A,flat blade)
H2:H1 display(Plug type C,Europlug)

1: 1 axis display

0:with I/O without RS-232
1:with I/O with RS-232
2:without I/O without RS-232 (standard)
3:without I/O with RS-232

00: for HIWIN 1mm positioning measurement system (analogue/digital)
A1: for HIWIN 5mm E type or H type positioning measurement system

3.3 Dimensions:

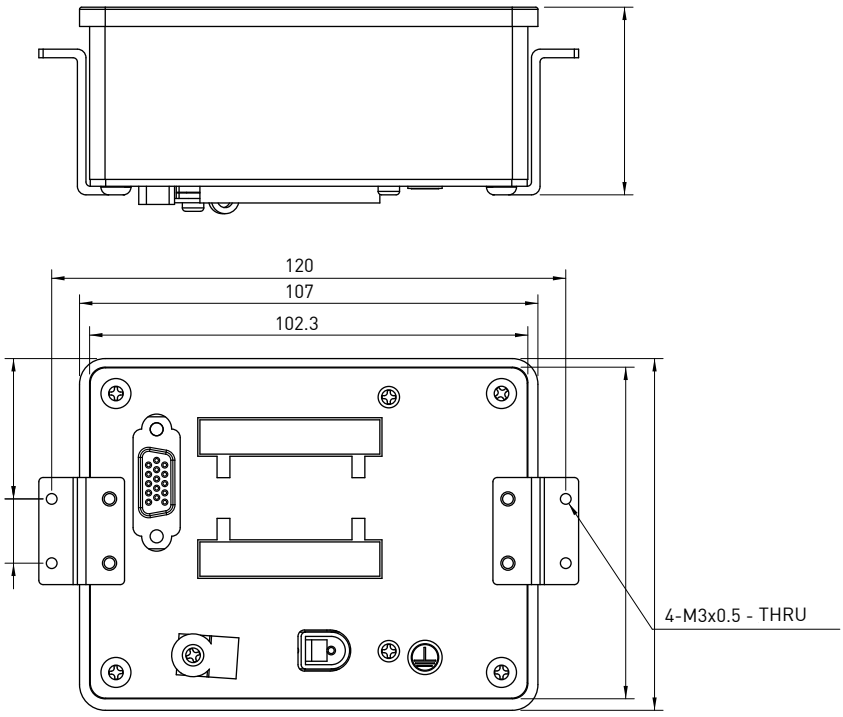

Unit: mm

+7 (499) 707–71–08
+7 (812) 385–42–35
+7 (831) 281–18–21

3.4 Input signal descriptions:

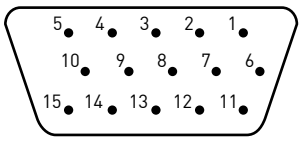

PIN	Definition	PIN	Definition	PIN	Definition
1	+5V	6	NC	11	SIN+(Analogue)
2	GND	7	Z+	12	SIN-(Analogue)
3	A+(Digital)	8	Z-	13	COS+(Analogue)
4	B+(Digital)	9	A-(Digital)	14	COS-(Analogue)
5	NC	10	B-(Digital)	15	NC

3.5 Relay output signal descriptions:

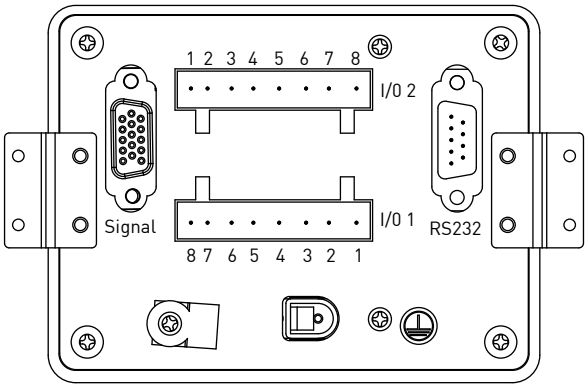

PIN	I/O 1	I/O 2
1	N.C.	N.C.
2		
3	N.C.	N.C.
4		
5	Relay 0(CH-0)	Relay 2(CH-2)
6		
7	Relay 1(CH-1)	Relay 3(CH-3)
8		

+7 (499) 707–71–08
+7 (812) 385–42–35
+7 (831) 281–18–21

4. Multi-Axis Counter

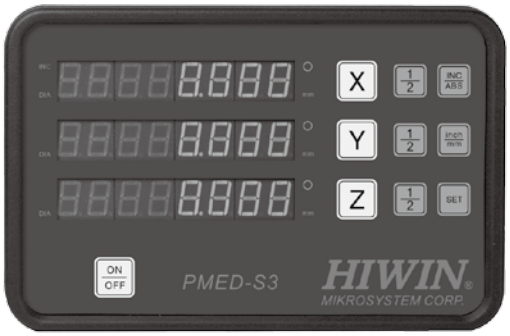

Features:

- LED display, high brightness
- Easy operation, suitable for cutting machines, traditional gantry milling machines, and programmable drilling machines
- Compact design and easy installation

4.1 Specifications:

Display		8 digit LED display
Resolution		0.1μm、0.2μm、0.5μm、1μm、2μm、5μm、10μm、20μm、50μm
Input signal		Digital：5V RS422/TTL
Input voltage		8~30VDC±5% / 0.08A
Operating Frequency		＜1.5MHz
Operating Temperature		0℃~50℃
Storage Temperature		-5℃~70℃
Protection class	Display	IP43
Function	General	ON/OFF function
		Coordinate Zero setting
		Unit conversion (mm/inch)
		Absolute/Incremental position(INC/ABS) selection
		Set display digits (0.0001, 0.0002, 0.0005, 0.001, 0.002, 0.005, 0.01, 0.02, 0.05, 0.1, 0.2, 0.5, 1, 5, 10)
		Radius/diameter selection (RAD/DIA)
	Other	auto-center (1/2) function
		Linear error compensation
		Instant power failure memory
		RS-232 output

PROMXOLDING
+7 (499) 707–71–08
+7 (812) 385–42–35
+7 (831) 281–18–21

4.2 Ordering Code:

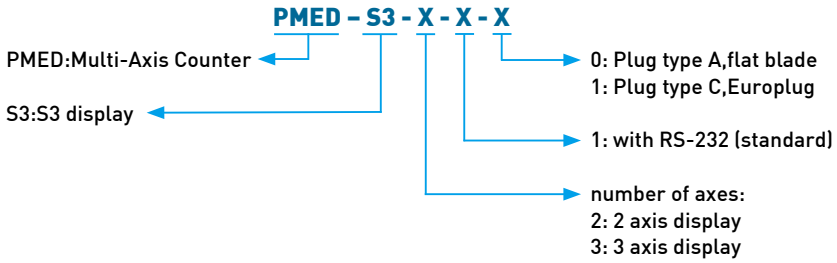

4.3 Dimensions:

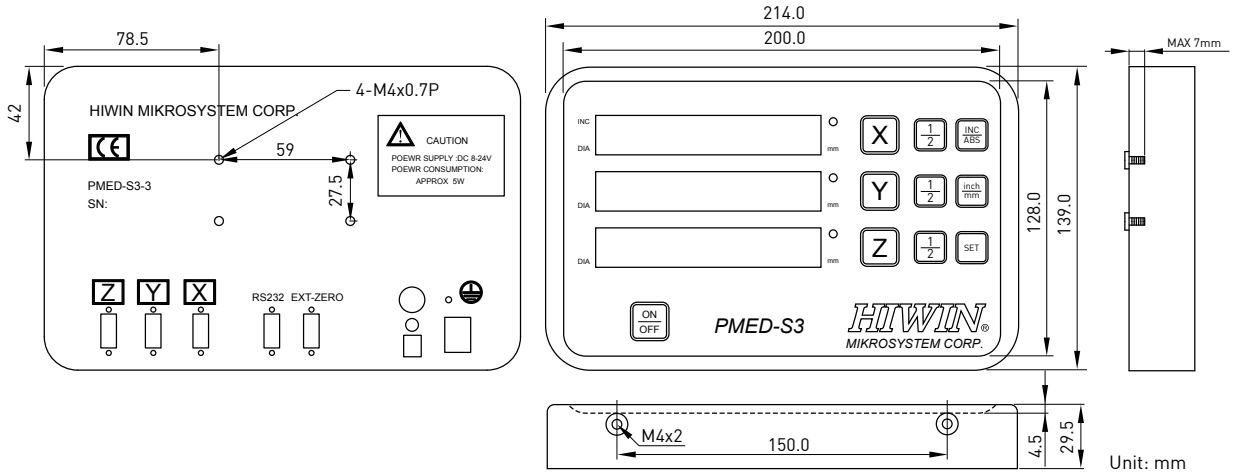

4.4 Input signal descriptions:

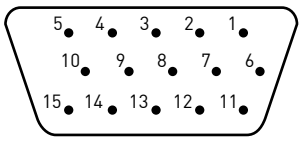

PIN	Definition	PIN	Definition	PIN	Definition
1	+5V	6	FG	11	NC
2	GND	7	NC	12	NC
3	A+	8	NC	13	NC
4	B+	9	NC	14	NC
5	ABS-	10	NC	15	NC

Note: NC: No Connection
FG: Frame Ground

+7 (499) 707–71–08
+7 (812) 385–42–35
+7 (831) 281–18–21

5. High Efficiency Multi-Axis Counter

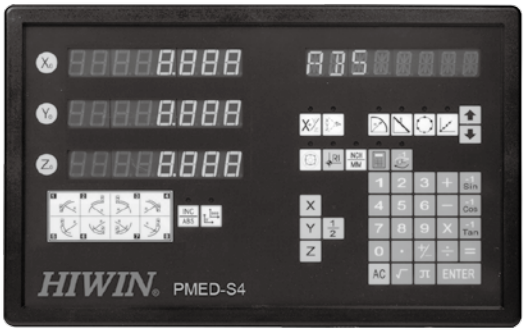

Features:

- LED display
- Suitable for CNC machine centers, gantry machine centers, milling machines and drilling machines
- Easy operation and installation

5.1 Specifications:

Display		8 digit LED display
Resolution		0.1μm、0.2μm、0.5μm、1μm、2μm、5μm、10μm、20μm、50μm
Input signal		digital: 5V TTL/RS422
Input voltage		90~240VAC
Operating Frequency		＜2MHz
Operating Temperature		0˚C~50˚C
Storage Temperature		-5˚C~70˚C
Protection class	Display	IP43
Function	General	Coordinate Zero setting
		Unit conversion (mm/inch)
		Absolute/Incremental position(INC/ABS) selection
		Set display digits (0.0001, 0.0002, 0.0005, 0.001, 0.002, 0.005, 0.01, 0.02, 0.05, 0.1, 0.2, 0.5, 1, 5, 10)
		Radius/diameter selection (RAD/DIA)
		auto-center (1/2) function
	Other	Linear error compensation
		Instant power failure memory
		Shrink function, Calculator, RI detection, Bolt Circle machining, R-angle, Divide holes on an oblique line, Machining on an oblique line
		arc surface machining,inclined plane machining

PROMXOLDING
+7 (499) 707–71–08
+7 (812) 385–42–35
+7 (831) 281–18–21

5.2 Ordering Code:

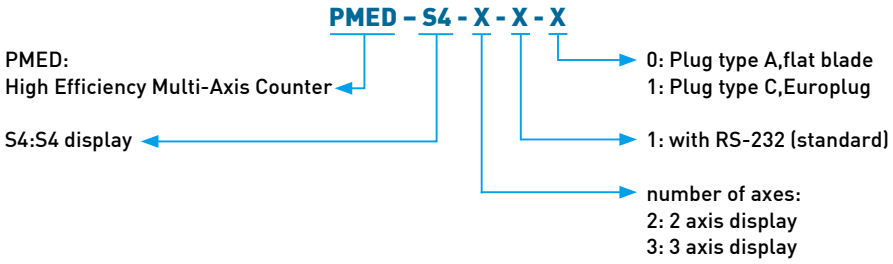

5.3 Dimensions:

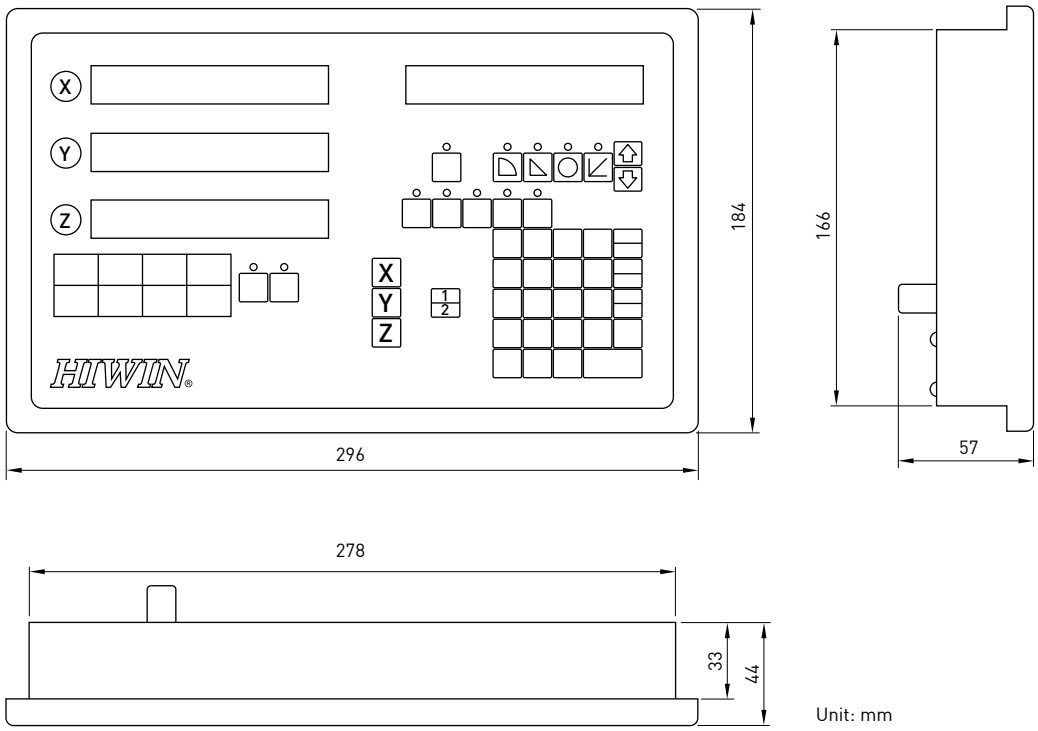

5.4 Input signal descriptions:

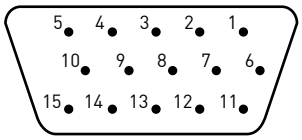

PIN	Definition	PIN	Definition	PIN	Definition
1	+5V	6	FG	11	NC
2	GND	7	NC	12	NC
3	A+	8	NC	13	NC
4	B+	9	NC	14	NC
5	ABS-	10	NC	15	NC

Note: NC: No Connection
FG: Frame Ground

PROMXOLDING
+7 (499) 707–71–08
+7 (812) 385–42–35
+7 (831) 281–18–21

V. Accessories

1. Signal Transfer Cable

- Signal transfer cable for alternative display devices

Ordering Code:

STC - XX - XX - X

- STC: Signal Transfer Cable
- 0: standard type
- 1:with metal tube
- 00: D-sub VGA 15 pin (for HIWIN display)
- 02: flying lead
- 01: cable length 1m
- 02: cable length 2m

2. Positining Scale Installation Fixture

- For easy scale installation and parallelism of scale with respect to axis is guaranteed.

Ordering Code:

PST - 02

- PST: Positioning Scale Installation Fixture
- 02: for tiny type positioning measurement
- 03: for Vertical type positioning measurement
- 04: for Standard type positioning measurement

3. Positioning Scale Fixture

- Prenventing the warpage of scale under harsh environment.

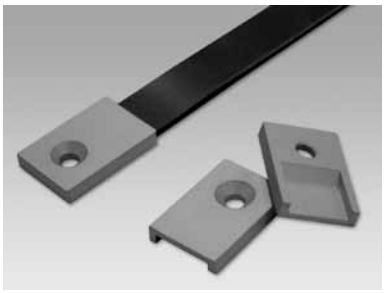

Ordering Code:

PSF - 01

- PSF:Positioning Scale Fixture
- 01: standard

+7 (499) 707–71–08
+7 (812) 385–42–35
+7 (831) 281–18–21

VI. Customer's Requirements(PM)

Date:

Company name				Contact person	
Tel		Fax		Title	
Specifications Requirements for positioning measurement encoders	Accuracy (μm)		Notes		
	Resolution (μm)				
	Repeatability (μm)				
	Max. speed (m/min)				
	Input voltage (V)				
	Output signal				
	Operating Temperature (˚C)				
	Protection level				
Specifications Requirements for signal transistors	Input voltage (V)				
	Output format				
Specifications Requirements for displays	Display axes				
	Display digits				
	Input voltage (V)				
	Operating speed (m/min)				
Budget					
Quantity					
Recommended specification : Proponent :					

Manager : Head : Applicant :

+7 (499) 707–71–08
+7 (812) 385–42–35
+7 (831) 281–18–21

MEMO

+7 (499) 707–71–08
+7 (812) 385–42–35
+7 (831) 281–18–21

MEMO

+7 (499) 707–71–08
+7 (812) 385–42–35
+7 (831) 281–18–21

MEMO

PROMXOLDING
+7 (499) 707–71–08
+7 (812) 385–42–35
+7 (831) 281–18–21

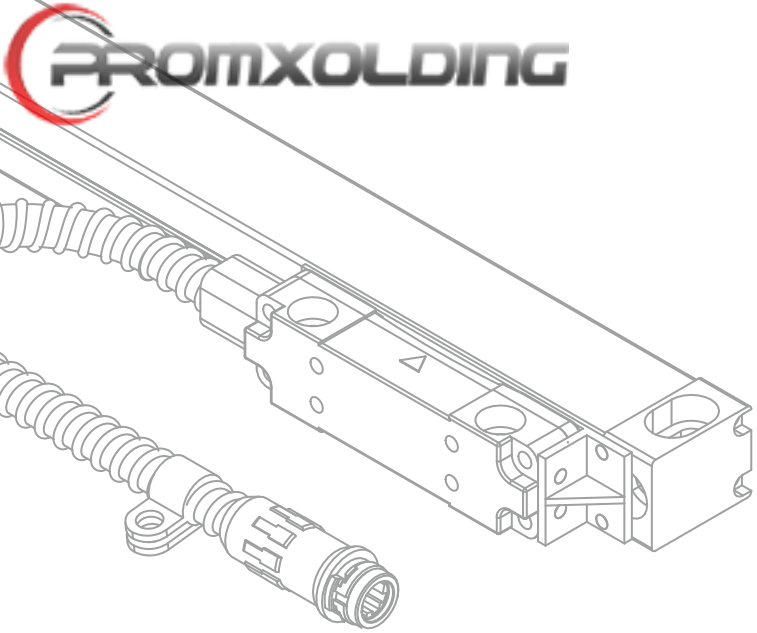

HIWIN®
Motion Control and System Technology

HIWIN MIKROSYSTEM CORP.
No.6, Jingke Central Rd.,
Taichung Precision Machinery Park,
Taichung 40852, Taiwan
Tel: +886-4-23550110
Fax: +886-4-23550123
www.hiwinmikro.tw
business@hiwinmikro.tw

Subsidiaries & R&D Centers

HIWIN GmbH
OFFENBURG, GERMANY
www.hiwin.de
www.hiwin.eu
info@hiwin.de

HIWIN Schweiz GmbH
JONA, SWITZERLAND
www.hiwin.ch
info@hiwin.ch

HIWIN KOREA
SOWON, KOREA
www.hiwin.kr
info@hiwin.kr

HIWIN JAPAN
KOBE · TOKYO · NAGOYA · NAGANO · TOHOKU · HOKURIKU · HIROSHIMA · KUMAMOTO, JAPAN
www.hiwin.co.jp
info@hiwin.co.jp

HIWIN FRANCE
ECHAUFFOUR, FRANCE
www.hiwin.fr
info@hiwin.fr

HIWIN CHINA
SUZHOU, CHINA
www.hiwin.cn
info@hiwin.cn

HIWIN USA
CHICAGO · SILICON VALLEY, U.S.A.
www.hiwin.com
info@hiwin.com

HIWIN Srl
BRUGHERIO, ITALY
www.hiwin.it
info@hiwin.it

Mega-Fabs Motion System, Ltd.
HAIFA, ISRAEL
www.mega-fabs.com
info@mega-fabs.com

HIWIN s.r.o.
BRNO, CZECH REPUBLIC
www.hiwin.cz
info@hiwin.cz

HIWIN SINGAPORE
SINGAPORE
www.hiwin.sg
info@hiwin.sg

The specifications in this catalog are subject to change without notification.

1. HIWIN is the registered trademark of Hiwin Mikrosystem Corp.. Please avoid buying the counterfeit goods that are from unknown sources to protect your rights.
2. Actual products may be different from the specifications and photos in this catalog, and the differences in appearances or specifications may be caused by, among other things, product improvements.
3. Hiwin will not sell or export those techniques and products restricted under the "Foreign Trade Act" and relevant regulations. Any export of restricted products should be approved by competent authorities in accordance with relevant laws, and shall not be used to manufacture or develop the nuclear, biochemical, missile and other military weapons.

©2015 FORM ME99TE06-1501
(PRINTED IN TAIWAN)